WANSHSIN®

COMPACT AC GEAR MOTOR CATALOG

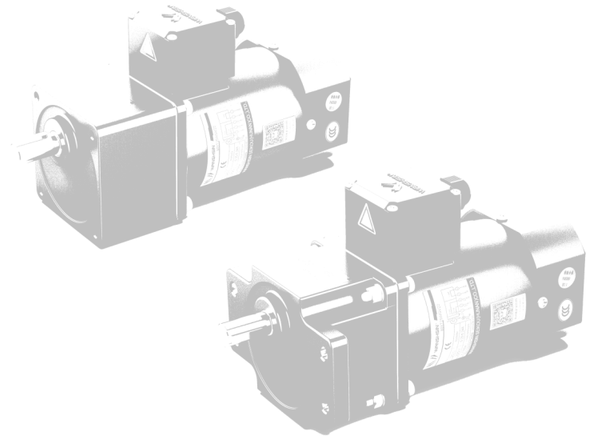

Committed To Building A World-class Intelligent Electromechanical Brand

WANSHSIN SEIKOU (HUNAN) CO., LTD
Website: www.wanshsindrive.com
Add. : WANSHSIN Industrial Park, Ningxiang Hi-tech Zone, Changsha City, Hunan Province, China 410600
Tel. : +86 731 82247038
Email : sales@wanshsin.com

CONTENTS

COMPANY INTRODUCTION

WANSHSIN was founded in 2009 in Dongguan, Guangdong, and moved its headquarters to Changsha Hunan in 2014.

WANSHSIN is a leading professional gearbox and gearmotor manufacturer and intelligent automation complete solution provider, integrating R&D, production, sales and service, products include gear reducer, gear motor and controller (servo driver, inverter, etc), which are widely used in lithium battery industry, automated production lines, robots, automobile manufacturing, engineering machinery, warehousing and logistics, metallurgy chemicals, ceramics, animal husbandry and other industries. WANSHSIN has gradually become a reliable long-term partner of those leading enterprises of relevant industries.

3	5	40+	700+	800,000
R&D Center	Production Base	Countries	Global Staff	Annual Quantities

CORE COMPETITIVENESS

Excellent Quality Control

We are the pioneer in introducing and launching the advanced automotive industry quality control standards pre-planning of product quality and have equipped with a large number of imported international advanced inspection/testing equipment to ensure product quality.

Advanced Manufacturing Capability

We have hundreds of domestic advanced processing equipment with a total value of more than USD25 million, and our capacity is in a leading position in China.

Fast Delivery

Self built warehouse system with sufficient inventory; Short delivery cycle, fast delivery of conventional and non-standard products; Configure with a number of domestic TOP-level logistics providers; Fast after-sales response.

COMPACT AC GEAR MOTOR

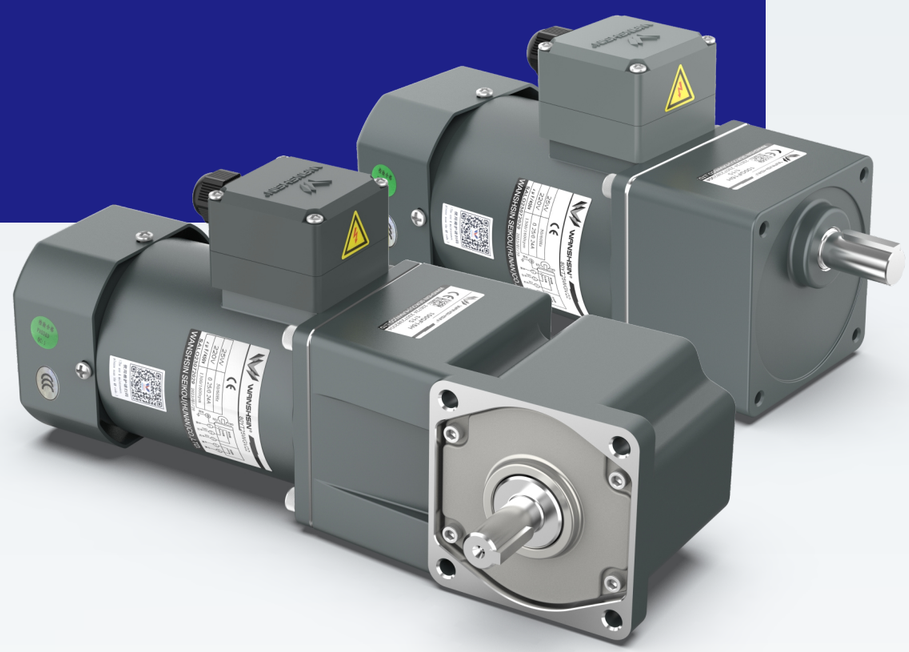

MODEL SELECTION

COMPACT AC GEAR MOTOR

AC MOTOR MODEL

60 YS 06W G/D V22 □
1 2 3 4 5 6

1 Stand Code
60、70、80、90、100

2 Name Code
YS: INDUCTION MOTOR
YT: VARIABLE SPEED MOTOR
YB: ELECTROMAGNETIC BRAKE MOTOR
YF: VARIABLE SPEED ELECTROMAGNETIC BRAKE MOTOR
YR: DAMPING MOTOR

3 Power Code
06W、15W、25W、40W、60W 、90W、120W、140W、160W、180W、200W、250W

4 Rotor Shaft Form Code
G: GEAR SHAFT
D: ROUND SHAFT

5 Voltage Code
V11: SINGLE PHASE 110V
V22: SINGLE PHASE 220V
Y22: THREE PHASE 220V
Y38: THREE PHASE 380V

6 Derived Code
X: LEAD (LINE LENGTH 300 MM)
T: WITH THERMAL PROTECTOR
H: WITH TERMINAL BOX
FF: WITH ELECTRONIC FAN (LOW TEMPERATURE)
−1: W/O FAN

GEARBOX MODEL

60 GK 100 H □
1 2 3 4 5

1 Stand Code
60、70、80、90、100、L80、L90、L100

2 Model Code
GK: 6-25W GEARBOX
GF: 40-200W GEARBOX
GM: (80. 90) INTERMEDIATE GEARBOX

3 Reduction Ratio Code
3、3.6… 200

4 Structure Code
H : STANDARD
HE : EARED
RT : RIGHT ANGLE SOLID
RC : RIGHT ANGLE HOLLOW

5 Derived Code
K : HOLE SCREW

COMPACT AC GEAR MOTOR TECHNICAL STANDARDS

- INSULATION RESISTANCE: After running at rated settings under normal temperature and humidity, the insulation resistance between the winding and the shell of the motor measured with a DC500V megger should be more than 100MΩ.
- INSULATION VOLTAGE: After running at rated settings under normal temperature and humidity, apply 50Hz or 60Hz, 1.5KV between the winding and the shell for one minute, and the motor is normal.
- TEMPERATURE RISE: When running at rated settings with gearbox or equivalent heat radiating plate installed, the temperature rise of the winding measured in resistance method is 75K or less.
- INSULATION CLASS: F (155℃)
- OVERHEATING PROTECTION DEVICE: With built-in thermal protection device (automatic reset type); operating temperature: 120±5℃; reset temperature: 82±15℃ (this feature should be customized)
- AMBIENT TEMPERATURE:-10℃~+40℃(no freezing)
- AMBIENT HUMIDITY:Below 85%(no condensation)

DC GEAR MOTOR

DC GEAR MOTOR MODEL

60DC20GV24R16□

1 2 3 4 5 6 7

1 Stand Code
60、70、80、90、100

2 DC Motor Series
DC

3 Power Code
10W、15W、20W、30W、40W、60W、65W、70W、100W、120W、200W、300W

4 Rotor Shaft Form Code
G: GEAR SHAFT
D: ROUND SHAFT

5 Voltage Code
V12、V24、V90、V180

6 Speed
R16: 1600r/min
R18: 1800r/min

7 Derived Code
X: LEAD (LINE LENGTH 300 MM)

DC GEAR MOTOR TECHNICAL STANDARDS

- INSULATION RESISTANCE: After running under normal temperature and humidity, the insulation resistance between the metal coil and the shell of the motor measured with a DC500V megger should be more than 100MΩ.
- INSULATION VOLTAGE: After running under normal temperature and humidity, apply 1500V, 50/60Hz between the metal coil and the shell for one minute, and the motor is normal.
- TEMPERATURE RISE: After running the motor, the temperature rise of the coil winding measured in resistance method is 80℃ or less.
  INSULATION CLASS: B (130℃)
- OPERATING TEMPERATURE: -10~40℃ (no freezing)
- AMBIENT HUMIDITY:Under 85%(no condensation)

GENERAL PARAMETERS

COMPACT AC MOTOR WIRING DIAGRAM AND RUNNING CAPACITOR DIMENSIONS

GEAR SHAFT

ROUND SHAFT

Wiring diagram

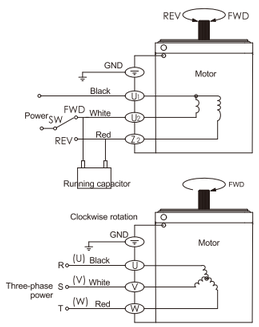

- **CLOCKWISE ROTATION**
  Turn the switch (SW) to FWD and the motor rotates clockwise.
- **COUNTERCLOCKWISE ROTATION**
  Turn the switch (SW) to REV and the motor rotates counterclockwise; If any two of U, V and W are exchanged,

⚠ NOTE

- Rotation direction is facing the motor output terminal. The clockwise direction is FWD, and the counterclockwise direction is REV.
- The rotation direction of single phase motor should be switched when the motor is stopped.
- Switch the rotation direction only when the motor has stopped, or else it may be impossible to change or take longer time.

Running capacitor (single phase motor accessories)dimensions

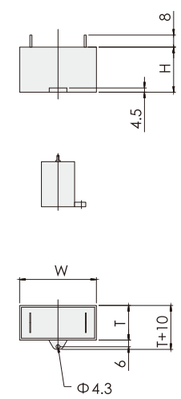

MODEL	CAPACITANCE VOLTAGE	DIMENSIONS W	T	H
6W	0.8μf/450V	37	11	25
	3 μf/250V	37	16	30
15W	1.5μf/450V	37	11	25
	6μf/250V	47	18	35
25W	2μf/450V	37	16	30
	8μf/250V	47	20	37
40W	3μf/450V	48	20	31
	12μf/250V	59	27	38
60W	4μf/450V	48	20	32
	16μf/250V	58	28	50
90W	5μf/450V	47	20	37
	20μf/250V	59	30	50
120W	6μf/450V	47	20	37
	24μf/250V	59	30	50
140W	8μf/450V	47	23	41
	32μf/250V	60	30	50
200W	10μf/450V	59	27	38
	40μf/250V	70	40	55

DC MOTOR WIRING DIAGRAM

GEAR SHAFT

ROUND SHAFT

Wiring diagram

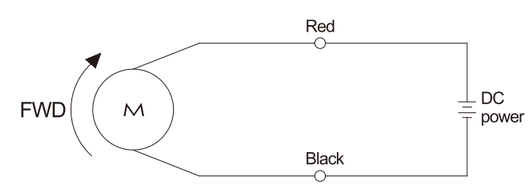

- The length of motor lead is about 300mm

COMPACT AC GEAR MOTOR

6W

□60×60mm

MOTOR PERFORMANCE

MODEL		MAX. OUTPUT POWER W	VOLT. V	FREQUENCY Hz	CURRENT A	SPEED RANGE r/min	START TORQUE mN·m	RATED TORQUE(mN·m) 1200r/min	RATED TORQUE(mN·m) 90r/min	RUNNING CAPACITOR
GEAR SHAFT	60YS06GV11 60YR06GV11 60YT06GV11 60YB06GV11	6	Single phase 110	50Hz	0.23	90-1300	38	47	30	3μf/250V
ROUND SHAFT	60YS06DV11 60YR06DV11 60YT06DV11 60YB06DV11			60Hz	0.21	90-1600	40	50	30	
GEAR SHAFT	60YS06GV22 60YR06GV22 60YT06GV22 60YB06GV22	6	Single phase 220	50Hz	0.11	90-1300	38	47	32	0.8μf/450V
ROUND SHAFT	60YS06DV22 60YR06DV22 60YT06DV22 60YB06DV22			60Hz	0.10	90-1600	40	50	32	

▪Although the speed range of the motor is 50Hz, 90~1300r/min, 60Hz, 90~1600r/min, it easily causes overload and the cooling effect of the motor fan is poor if the speed is too low (<400r/min) and the motor torque decreases too much; therefore, please keep sufficient power margin and avoid operating in low speed section frequently. The optimal speed range of the motor is 50Hz, 400~1300r/min, 60Hz, 400~1600r/min.

▪When the power is cut off, the motor will stop immediately and hold the load.

REDUCTION RATIO PERFORMANCE CHART

REDUCTION RATIO		3	3.6	5	6	7.5	10	12.5	15	18	20	25	30
50Hz	Max output speed r/min	433	361	260	217	173	130	104	87	72	65	52	43
	Rated torque N·m	0.13	0.15	0.22	0.26	0.33	0.44	0.55	0.66	0.79	0.88	1.10	1.32
60Hz	Max output speed r/min	533	444	320	267	213	160	128	107	89	80	64	53
	Rated torque N·m	0.11	0.13	0.18	0.22	0.28	0.37	0.46	0.55	0.66	0.73	0.92	1.10
REDUCTION RATIO		36	40	50	60	75	90	100	120	150	180	200	
50Hz	Max output speed r/min	36	33	26	22	17	14	13	11	9	7	7	
	Rated torque N·m	1.59	1.76	2.06	2.18	2.42	3	3	3	3	3	3	
60Hz	Max output speed r/min	44	40	32	27	21	18	16	13	11	9	8	
	Rated torque N·m	1.33	1.47	1.71	1.82	2.02	2.42	2.65	3	3	3	3	

▪The speed in the table is the value of average motor speed (50Hz: 1300r/min, 60Hz: 1600r/min) divided by the reduction ratio.

▪The actual speed changes according to the load (±8%).

STANDARD GEARBOX

60GK □H

□ indicates the reduction ratio (1:3~200)

DIMENSIONS (CAD)

6YS/YR01

Round-axis motor,weight:0.8kg

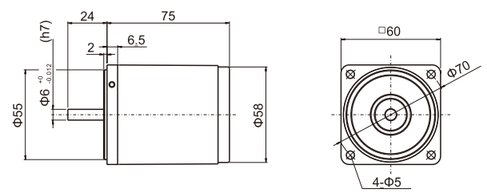

6YS/YR02

Combination:motor+standard gearbox(reduction ratio:1:3~200), weight:1.1kg

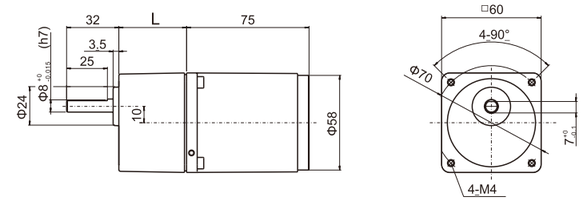

reduction ratio	≤18	L_1=32
reduction ratio	>18	L_2=41.5

6YT01

Round-axis motor,weight:0.9kg

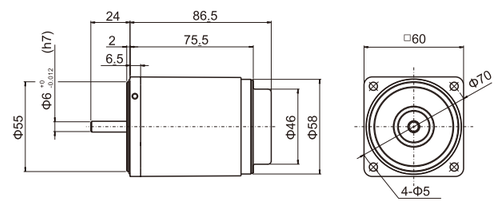

6YT02

Combination:motor+standard gearbox(reduction ratio:1:3~200), weight:1.1kg

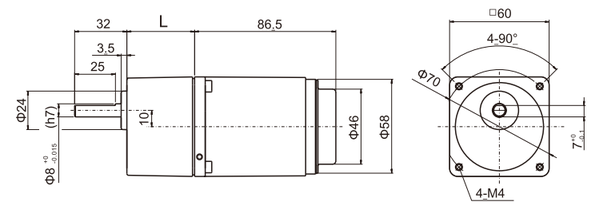

reduction ratio	≤18	L_1=32
reduction ratio	>18	L_2=41.5

6YB01

Round-axis motor,weight:1.2kg

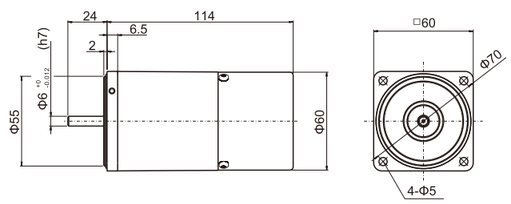

6YB02

Combination:motor+standard gearbox(reduction ratio:1:3~200), weight:1.5kg

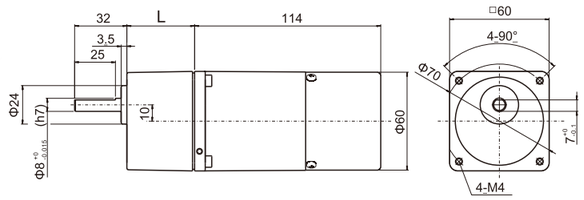

reduction ratio	≤18	L_1=32
reduction ratio	>18	L_2=41.5

15W

□70×70mm

MOTOR PERFORMANCE

MODEL		MAX. OUTPUT POWER W	VOLT. V	FREQUENCY Hz	CURRENT A	SPEED RANGE r/min	START TORQUE mN·m	RATED TORQUE(mN·m) 1200r/min	RATED TORQUE(mN·m) 90r/min	RUNNING CAPACITOR
GEAR SHAFT	70YS15GV11 70YR15GV11 70YT15GV11 70YB15GV11	15	Single phase 110	50Hz	0.39	90-1300	70	125	45	6μf/250V
ROUND SHAFT	70YS15DV11 70YR15DV11 70YT15DV11 70YB15DV11			60Hz	0.35	90-1600	65	125	45	
GEAR SHAFT	70YS15GV22 70YR15GV22 70YT15GV22 70YB15GV22	15	Single phase 220	50Hz	0.20	90-1300	70	125	40	1.5μf/450V
ROUND SHAFT	70YS15DV22 70YR15DV22 70YT15DV22 70YB15DV22			60Hz	0.17	90-1600	65	125	40	

▪Although the speed range of the motor is 50Hz, 90~1300r/min, 60Hz, 90~1600r/min, it easily causes overload and the cooling effect of the motor fan is poor if the speed is too low (<400r/min) and the motor torque decreases too much; therefore, please keep sufficient power margin and avoid operating in low speed section frequently. The optimal speed range of the motor is 50Hz, 400~1300r/min, 60Hz, 400~1600r/min.

▪When the power is cut off, the motor will stop immediately and hold the load.

REDUCTION RATIO PERFORMANCE CHART

REDUCTION RATIO		3	3.6	5	6	7.5	10	12.5	15	18	20	25	30
50Hz	Max output speed r/min	433	361	260	217	173	130	104	87	72	65	52	43
	Rated torque N·m	0.30	0.36	0.50	0.60	0.74	0.99	1.24	1.49	1.79	1.98	2.31	2.78
60Hz	Max output speed r/min	533	444	320	267	213	160	128	107	89	80	64	53
	Rated torque N·m	0.25	0.30	0.41	0.50	0.62	0.83	1.03	1.24	1.49	1.65	1.93	2.31
REDUCTION RATIO		36	40	50	60	75	90	100	120	150	180	200	
50Hz	Max output speed r/min	36	33	26	22	17	14	13	11	9	7	7	
	Rated torque N·m	3.33	3.70	4.63	5	5	5	5	5	5	5	5	
60Hz	Max output speed r/min	44	40	32	27	21	18	16	13	11	9	8	
	Rated torque N·m	2.78	3.09	3.86	4.35	5	5	5	5	5	5	5	

▪The speed in the table is the value of average motor speed (50Hz: 1300r/min, 60Hz: 1600r/min) divided by the reduction ratio.

▪The actual speed changes according to the load (±8%).

STANDARD GEARBOX
70GK □H

□ indicates the reduction ratio (1:3~200)

DIMENSIONS (CAD)

15YS/YR01

Round-axis motor,weight:1.1kg

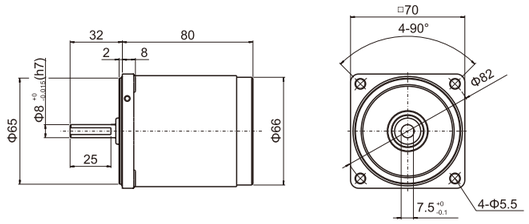

15YS/YR02

Combination:motor+standard gearbox(reduction ratio:1:3~200), weight:1.6kg

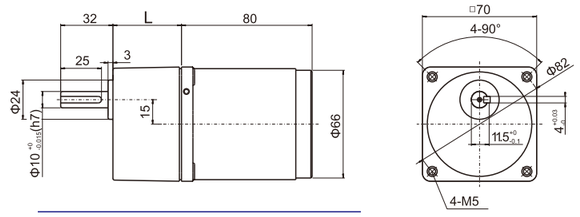

reduction ratio	≤15	L_1=32
reduction ratio	>15	L_2=42

15YT01

Round-axis motor,weight:0.9kg

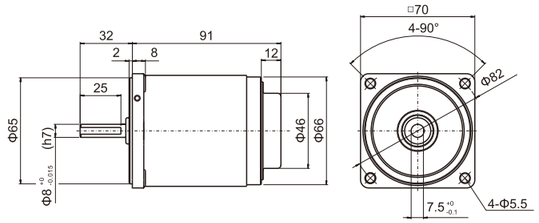

15YT02

Combination:motor+standard gearbox(reduction ratio:1:3~200), weight:1.2kg

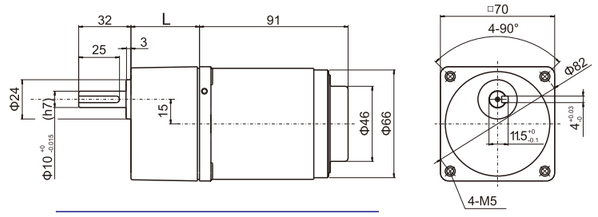

reduction ratio	≤15	L_1=32
reduction ratio	>15	L_2=42

15YB01

Round-axis motor,weight:1.1kg

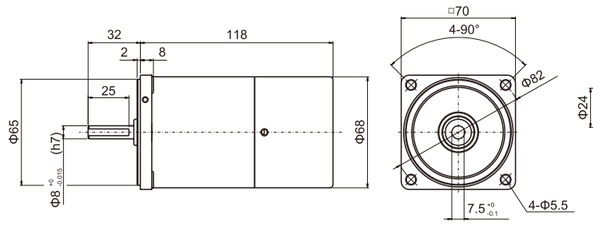

15YB02

Combination:motor+standard gearbox(reduction ratio:1:3~200), weight:2kg

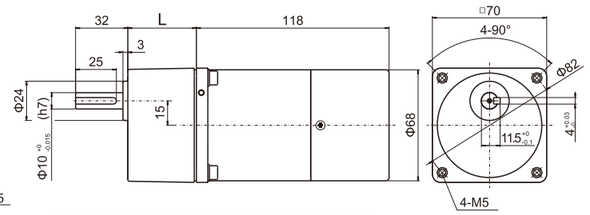

reduction ratio	≤15	L_1=32
reduction ratio	>15	L_2=42

25W

□80×80mm

MOTOR PERFORMANCE

MODEL		MAX. OUTPUT POWER W	VOLT. V	FREQUENCY Hz	CURRENT A	SPEED RANGE r/min	START TORQUE mN·m	RATED TORQUE(mN·m) 1200r/min	RATED TORQUE(mN·m) 90r/min	RUNNING CAPACITOR
GEAR SHAFT	80YS25GV11 80YT25GV11 80YR25GV11 80YB25GV11	25	Single phase 110	50Hz	0.53	90-1300	145	170	45	8μf/250V
ROUND SHAFT	80YS25DV11 80YT25DV11 80YR25DV11 80YB25DV11			60Hz	0.48	90-1600	120	170	45	
GEAR SHAFT	80YS25GV22 80YT25GV22 80YR25GV22 80YB25GV22	25	Single phase 220	50Hz	0.25	90-1300	145	205	50	2μf/450V
ROUND SHAFT	80YS25DV22 80YT25DV22 80YR25DV22 80YB25DV22			60Hz	0.23	90-1600	120	205	50	
GEAR SHAFT	80YS25GY22 80YB25GY22	25	Three phase 220	50Hz	0.25	90-1300	250	195		
ROUND SHAFT	80YS25DY22 80YB25DY22			60Hz	0.23	90-1600	205	160		
GEAR SHAFT	80YS25GY38 80YB25GY38	25	Three phase 380	50Hz	0.14	90-1300	250	195		
ROUND SHAFT	80YS25DY38 80YB25DY38			60Hz	0.13	90-1600	205	160		

▪Although the speed range of the motor is 50Hz, 90~1300r/min, 60Hz, 90~1600r/min, it easily causes overload and the cooling effect of the motor fan is poor if the speed is too low (<400r/min) and the motor torque decreases too much; therefore, please keep sufficient power margin and avoid operating in low speed section frequently. The optimal speed range of the motor is 50Hz, 400~1300r/min, 60Hz, 400~1600r/min.

▪When the power is cut off, the motor will stop immediately and hold the load.

REDUCTION RATIO PERFORMANCE CHART

REDUCTION RATIO		3	3.6	5	6	7.5	10	12.5	15	18	20	25	30
50Hz	Max output speed r/min	433	361	260	217	173	130	104	87	72	65	52	43
	Rated torque N·m	0.50	0.60	0.83	0.99	1.24	1.65	1.95	2.34	2.81	3.12	3.90	4.68
60Hz	Max output speed r/min	533	444	320	267	213	160	128	107	89	80	64	53
	Rated torque N·m	0.41	0.50	0.69	0.83	1.03	1.38	1.63	1.95	2.34	2.60	3.25	3.90
REDUCTION RATIO		36	40	50	60	75	90	100	120	150	180	200	
50Hz	Max output speed r/min	36	33	26	22	17	14	13	11	9	7	7	
	Rated torque N·m	5.62	6.24	6.89	8	8	8	8	8	8	8	8	
60Hz	Max output speed r/min	44	40	32	27	21	18	16	13	11	9	8	
	Rated torque N·m	4.68	5.20	5.74	6.88	8	8	8	8	8	8	8	

▪The speed in the table is the value of average motor speed (50Hz: 1300r/min, 60Hz: 1600r/min) divided by the reduction ratio.

▪The actual speed changes according to the load (±8%).


STANDARD GEARBOX
80GK □H


RIGHT ANGLE HOLLOW GEARBOX
L80GK □RC

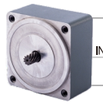
INTERMEDIATE GEARBOX
80GM10


RIGHT ANGLE SOLID GEARBOX
L80GK □RT

□ indicates the reduction ratio (1:3~200); intermediate gearbox:(1 : 10)

DIMENSIONS (CAD)

25YS/YR01

Round-axis motor,weight:1.6kg

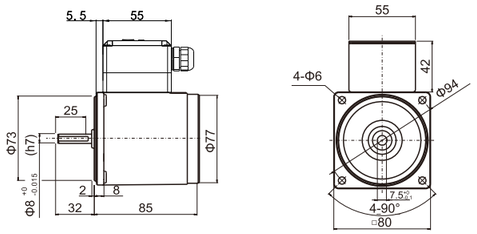

25YS/YR02

Combination:motor+standard gearbox(reduction ratio:1:3~200), weight:2.3kg

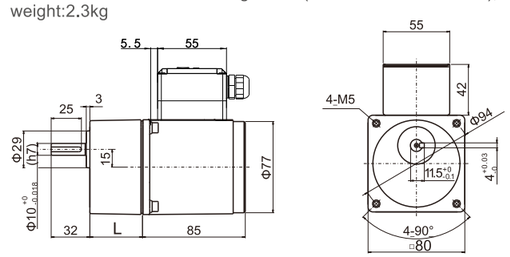

reduction ratio	≤25	L_1=32
reduction ratio	>25	L_2=43.5

25YS/YR03

Combination:motor+Intermediate gearbox+standard gearbox(reduction ratio:1:200~1800),weight:2.8kg

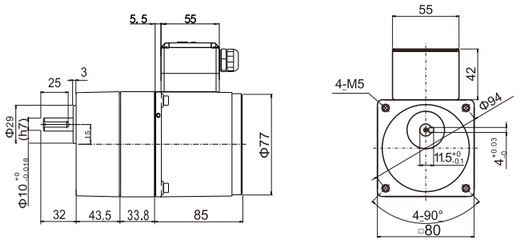

25YS/YR04

Combination:motor+right angle solid gearbox(reduction ratio:1:3~200), weight:3.8kg

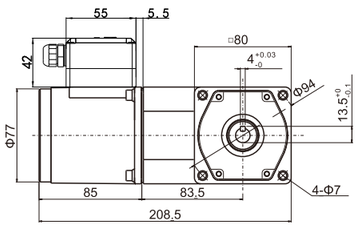

25YS/YR05

Combination:motor+intermediate gearbox+right angle solid gearbox(reduction ratio：1：200~1800),weight:4.3kg

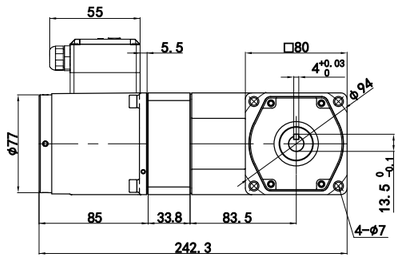

DIMENSIONS (CAD)

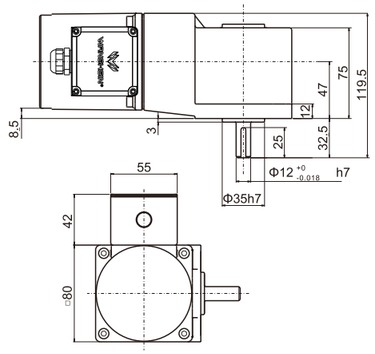

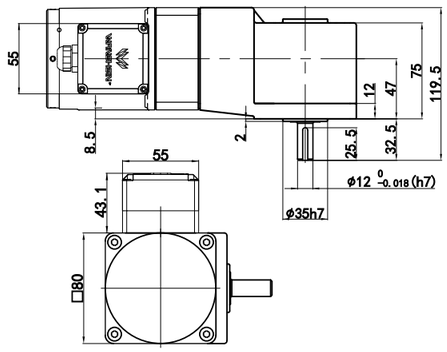

25YS/YR06

Combination:motor+right angle hollow gearbox(reduction ratio:1:3~200), weight:3.7kg

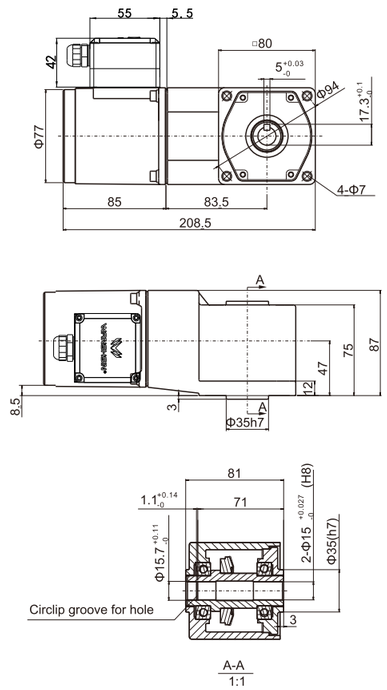

25YS/YR07

Combination:motor+intermediate gearbox+right angle hollow gearbox (reduction ratio:1:200~1800),weight:4.2kg

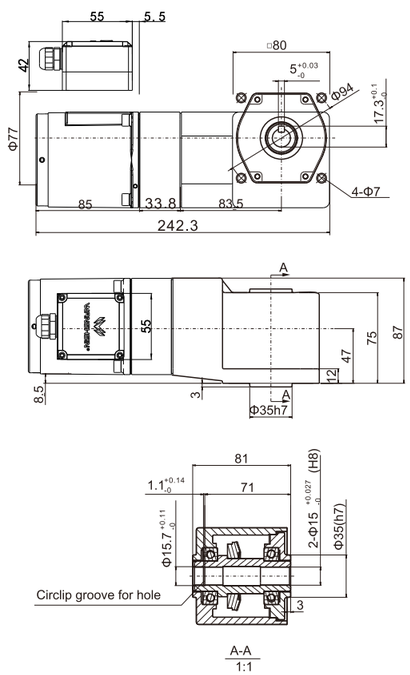

DIMENSIONS (CAD)

25YT01

Round-axis motor,weight:1.7kg

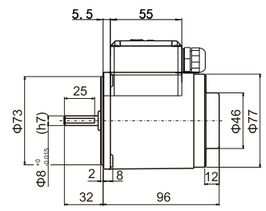

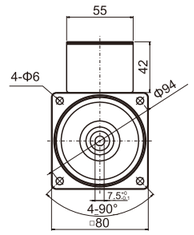

25YT02

Combination:motor+standard gearbox(reduction ratio:1:3~200), weight:2.4kg

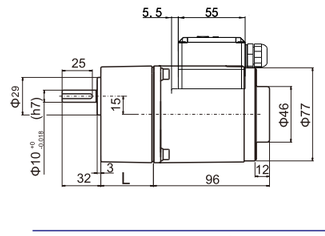

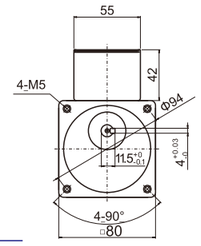

reduction ratio	≤25	L_1=32
reduction ratio	>25	L_2=43.5

25YT03

Combination:motor+intermediate gearbox+standard gearbox(reduction ratio:1:200~1800),weight:2.9kg

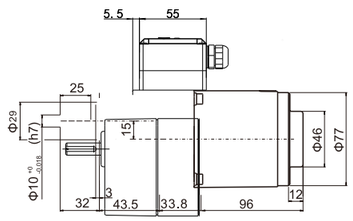

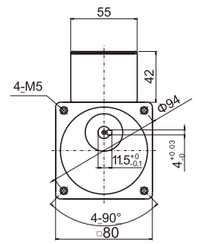

25YT04

Combination:motor+right angle solid gearbox(reduction ratio:1:3~200), weight:3.8kg

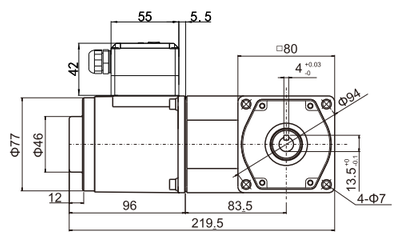

25YT05

Combination:motor+intermediate gearbox+right angle solid gearbox(reduction ratio:1:200~1800),weight:4.3kg

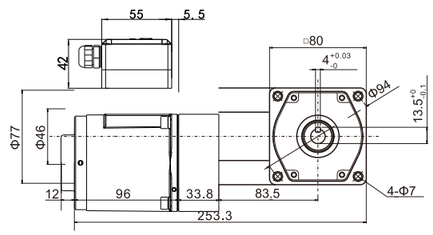

DIMENSIONS (CAD)

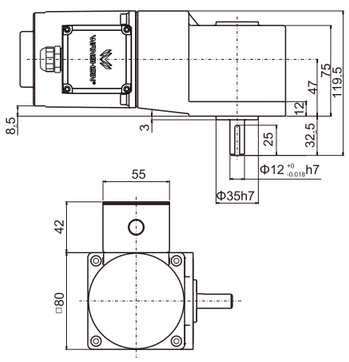

25YT06

Combination:motor+right angle hollow gearbox(reduction ratio:1:3~200), weight:3.7kg

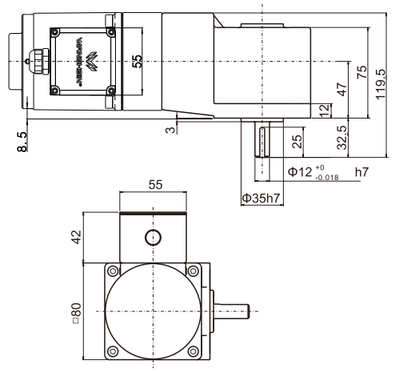

25YT07

Combination:motor+intermediate gearbox+right angle hollow gearbox (reduction ratio:1:200~1800),weight:4.2kg

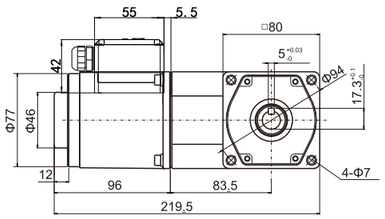

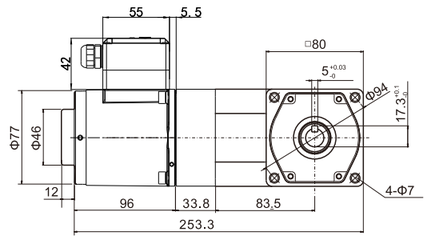

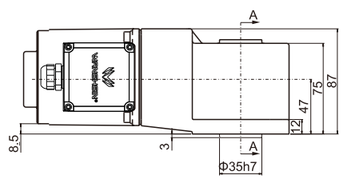

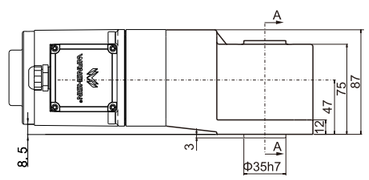

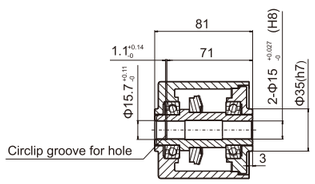

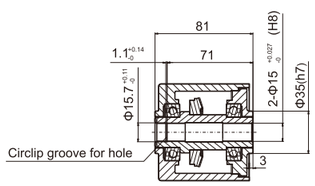

DIMENSIONS (CAD)

25YB01

Round-axis motor,weight:2kg

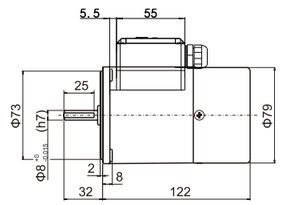

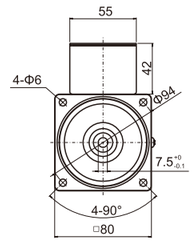

25YB02

Combination:motor+standard gearbox(reduction ratio:1:3~200), weight:2.7kg

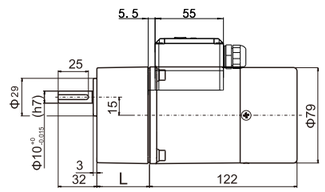

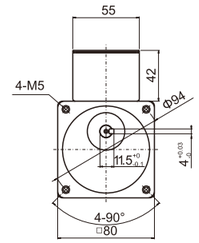

reduction ratio	≤25	L_1=32
reduction ratio	>25	L_2=43.5

25YB03

Combination:motor+intermediate gearbox+standard gearbox(reduction ratio:1:200~1800),weight:3.2kg

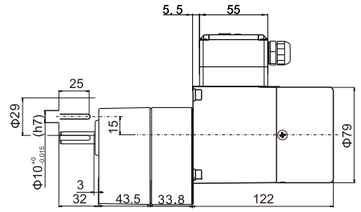

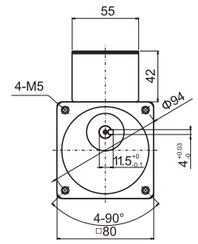

25YB04

Combination:motor+right angle solid gearbox(reduction ratio:1:3~200), weight:3.8kg

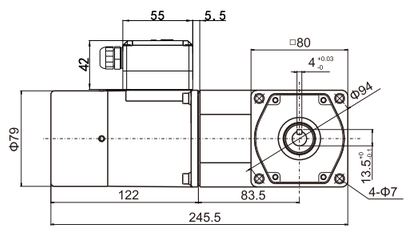

25YB05

Combination:motor+intermediate gearbox+right angle solid gearbox(reduction ratio:1:200~1800),weight:4.3kg

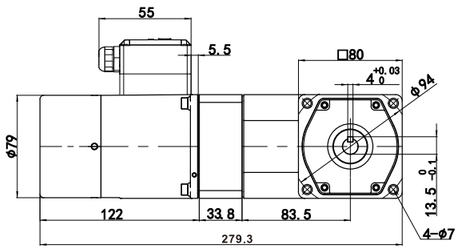

DIMENSIONS (CAD)

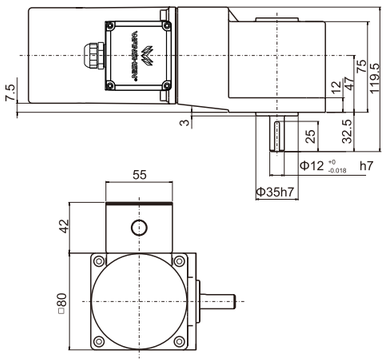

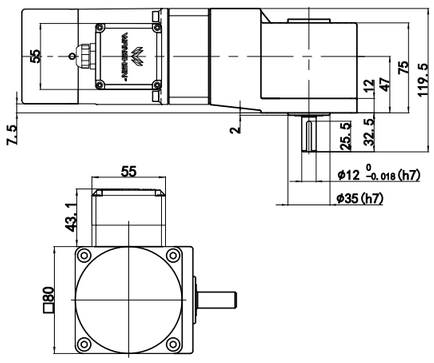

25YB06

Combination:motor+right angle hollow gearbox(reduction ratio:1:3~200), weight:3.7kg

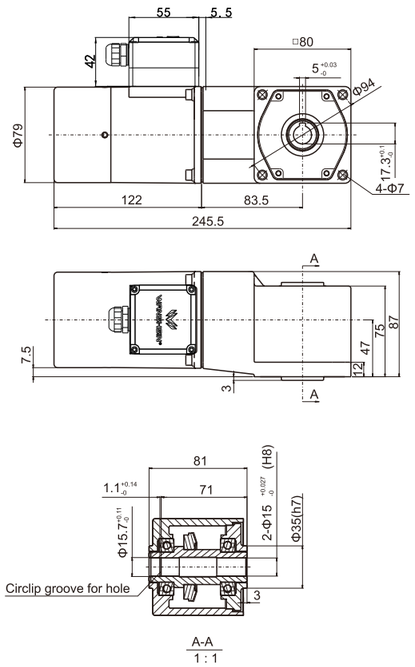

25YB07

Combination:motor+intermediate gearbox+right angle hollow gearbox (reduction ratio:1:200~1800),weight:4.2kg

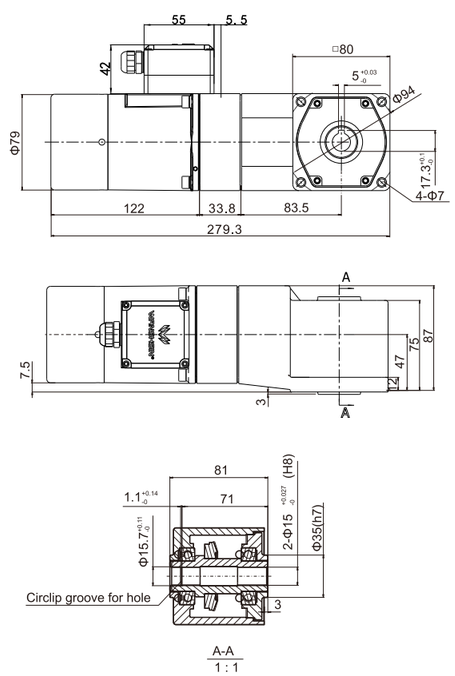

40W
60W

□90×90mm

MOTOR PERFORMANCE

MODEL		MAX. OUTPUT POWER W	VOLT. V	FREQUENCY Hz	CURRENT A	SPEED RANGE r/min	START TORQUE mN·m	RATED TORQUE mN·m 1200r/min	RATED TORQUE mN·m 90r/min	RUNNING CAPACITOR
GEAR SHAFT	90YS40GV11 90YR40GV11 90YT40GV11 90YF40GV11 90YB40GV11	40	Single phase 110	50Hz	0.79	90-1300	235	300	65	12μf/250V
ROUND SHAFT	90YS40DV11 90YR40DV11 90YT40DV11 90YF40DV11 90YB40DV11			60Hz	0.71	90-1600	180	260	70	
GEAR SHAFT	90YS40GV22 90YR40GV22 90YT40GV22 90YF40GV22 90YB40GV22	40	Single phase 220	50Hz	0.40	90-1300	235	320	65	3μf/450V
ROUND SHAFT	90YS40DV22 90YR40DV22 90YT40DV22 90YF40DV22 90YB40DV22			60Hz	0.37	90-1600	180	260	70	
GEAR SHAFT	90YS40GY22 90YB40GY22	40	Three phase 220	50Hz	0.35	90-1300	403	310		
ROUND SHAFT	90YS40DY22 90YB40DY22			60Hz	0.32	90-1600	338	260		
GEAR SHAFT	90YS40GY38 90YB40GY38	40	Three phase 380	50Hz	0.21	90-1300	403	310		
ROUND SHAFT	90YS40DY38 90YB40DY38			60Hz	0.19	90-1600	338	260		
GEAR SHAFT	90YS60GV11 90YR60GV11 90YT60GV11 90YF60GV11 90YB60GV11	60	Single phase 110	50Hz	1.26	90-1300	350	490	200	12μf/250V
ROUND SHAFT	90YS60DV11 90YR60DV11 90YT60DV11 90YF60DV11 90YB60DV11			60Hz	1.14	90-1600	280	490	220	
GEAR SHAFT	90YS60GV22 90YR60GV22 90YT60GV22 90YF60GV22 90YB60GV22	60	Single phase 220	50Hz	0.62	90-1300	350	490	200	4μf/450V
ROUND SHAFT	90YS60DV22 90YR60DV22 90YT60DV22 90YF60DV22 90YB60DV22			60Hz	0.57	90-1600	280	490	220	
GEAR SHAFT	90YS60GY22 90YB60GY22	60	Three phase 220	50Hz	0.53	90-1300	600	460		
ROUND SHAFT	90YS60DY22 90YB60DY22			60Hz	0.48	90-1600	490	375		
GEAR SHAFT	90YS60GY38 90YB60GY38	60	Three phase 380	50Hz	0.32	90-1300	600	460		
ROUND SHAFT	90YS60DY38 90YB60DY38			60Hz	0.29	90-1600	490	375		

▪Although the speed range of the motor is 50Hz, 90~1300r/min, 60Hz, 90~1600r/min, it easily causes overload and the cooling effect of the motor fan is poor if the speed is too low (<400r/min) and the motor torque decreases too much; therefore, please keep sufficient power margin and avoid operating in low speed section frequently. The optimal speed range of the motor is 50Hz, 400~1300r/min, 60Hz, 400~1600r/min.

▪When the power is cut off, the motor will stop immediately and hold the load.

REDUCTION RATIO PERFORMANCE CHART

REDUCTION RATIO			3	3.6	5	6	7.5	10	12.5	15	18	20	25	30
40W	50Hz	Output bearing speed r/min	433	361	260	217	173	130	104	87	72	65	52	43
		Rated torque N·m	0.77	0.92	1.28	1.53	1.92	2.56	3.20	3.83	4.60	5.11	5.73	6.88
	60Hz	Output bearing speed r/min	533	444	320	267	213	160	128	107	89	80	64	53
		Rated torque N·m	0.64	0.77	1.07	1.28	1.60	2.13	2.66	3.20	3.83	4.26	4.78	5.73
60W	50Hz	Output bearing speed r/min	433	361	260	217	173	130	104	87	72	65	52	43
		Rated torque N·m	1.19	1.43	1.98	2.38	2.98	3.97	4.35	5.22	6.27	6.96	8.26	9.92
	60Hz	Output bearing speed r/min	533	444	320	267	213	160	128	107	89	80	64	53
		Rated torque N·m	0.99	1.19	1.65	1.98	2.48	3.31	3.63	4.35	5.22	5.80	6.89	8.26

REDUCTION RATIO			36	40	50	60	75	90	100	120	150	180	200
40W	50Hz	Output bearing speed r/min	36	33	26	22	17	14	13	11	9	7	7
		Rated torque N·m	8.25	9.17	10	10	10	10	10	10	10	10	10
	60Hz	Output bearing speed r/min	44	40	32	27	21	18	16	13	11	9	8
		Rated torque N·m	6.88	7.64	9.16	10	10	10	10	10	10	10	10
60W	50Hz	Output bearing speed r/min	36	33	26	22	17	14	13	11	9	7	7
		Rated torque N·m	11.90	13.22	16.53	19.83	20	20	20	20	20	20	20
	60Hz	Output bearing speed r/min	44	40	32	27	21	18	16	13	11	9	8
		Rated torque N·m	9.92	11.02	13.77	16.53	20	20	20	20	20	20	20

▪The speed in the table is the value of average motor speed (50Hz: 1300r/min, 60Hz: 1600r/min) divided by the reduction ratio.

STANDARD GEARBOX
90GF □H

EARED GEARBOX
90GF □HE

RIGHT ANGLE HOLLOW GEARBOX
L90GF □RC

RIGHT ANGLE SOLID GEARBOX
L90GF □RT

□ indicates the reduction ratio (1:3~200)

DIMENSIONS (CAD)

40/60YS/YR/YT/YB/YF01

Round-axis motor,weight:2.5kg

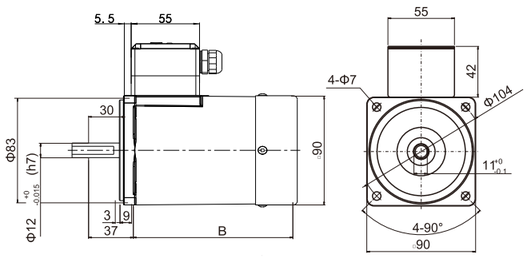

40/60YS/YR/YT/YB/YF02

Combination:motor+standard gearbox(reduction ratio:1:3~200), weight:3.7kg

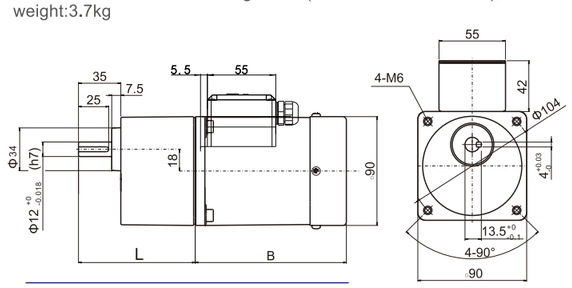

reduction ratio	≤10	L_1=77
reduction ratio	>10	L_2=96.5

40/60YS/YR/YT/YB/YF03

Combination:motor+intermediate gearbox+standard gearbox(reduction ratio:1:200~1800),weight:4.6kg

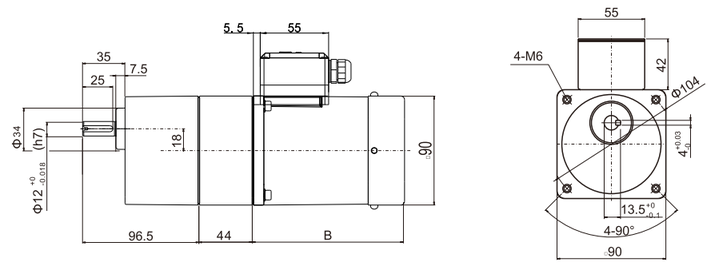

No.	Motor type	A	B	C
1	YS/YR	276.5	125	320.5
2	YT	287.5	136	331.5
3	YB	311.5	160	355.5
4	YF	323.5	172	367.5

40/60YS/YR/YT/YB/YF04

Combination:motor+eared gear(reduction ratio:1:3~200), weight:3.7kg

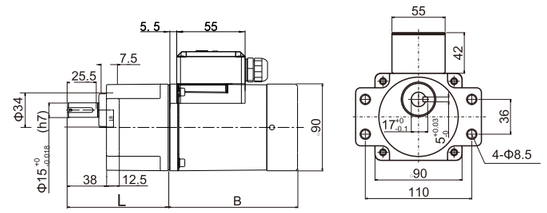

reduction ratio	≤10	L_1=80
reduction ratio	>10	L_2=99.5

40/60YS/YR/YT/YB/YF05

Combination:motor+intermediate gearbox+eared gear(reduction ratio:1:200~1800),weight:4.6kg

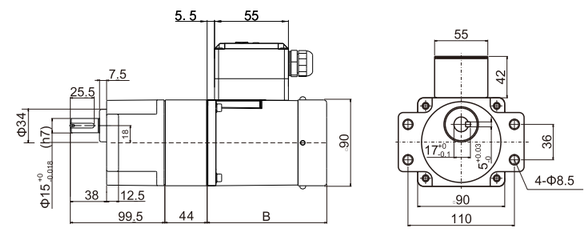

DIMENSIONS (CAD)

40/60YS/YR/YT/YB/YF06

Combination:motor+right angle solid gearbox(reduction ratio:1:3~200),weight:5.4kg

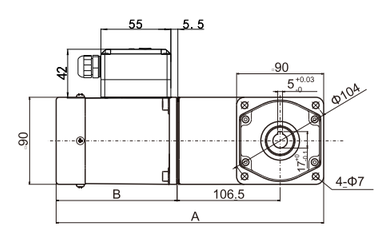

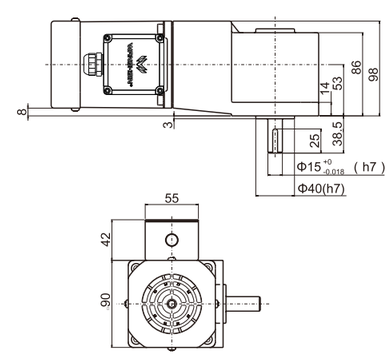

40/60YS/YR/YT/YB/YF07

Combination:motor+intermediate gearbox+right angle solid gearbox (reduction ratio:1:200~1800),weight:6.3kg

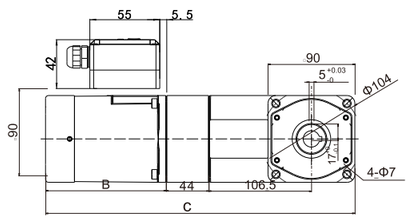

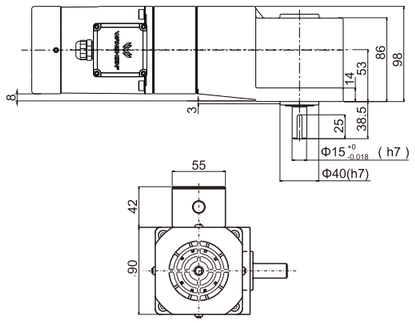

40/60YS/YR/YT/YB/YF08

Combination:motor+right angle hollow gearbox(reduction ratio:1:3~200), weight:5.3kg

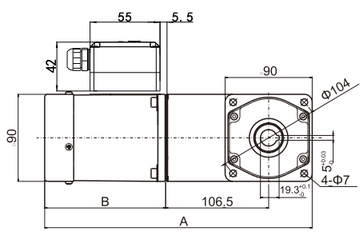

40/60YS/YR/YT/YB/YF09

Combination:motor+intermediate gearbox+right angle hollow gearbox (reduction ratio:1:200~1800),weight:6.2kg

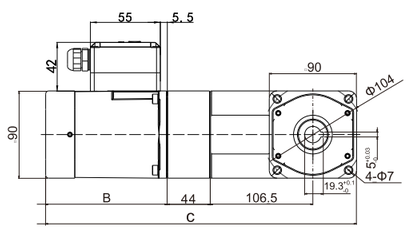

DIMENSIONS (CAD)

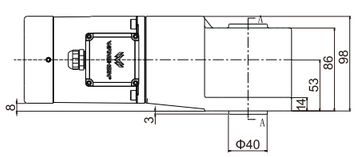

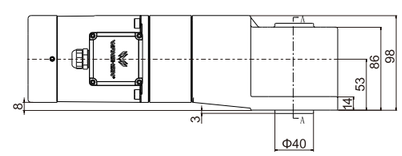

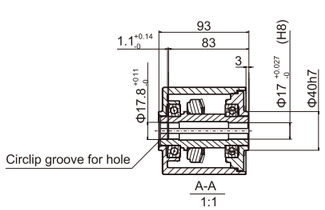

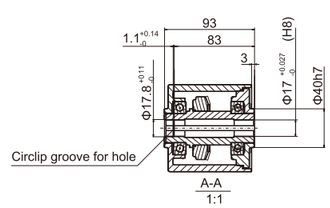

90W 120W

□90×90mm

MOTOR PERFORMANCE

MODEL			MAX. OUTPUT POWER W	VOLT. V	FREQUENCY Hz	CURRENT A	SPEED RANGE r/min	START TORQUE mN·m	RATED TORQUE mN·m 1200r/min	RATED TORQUE mN·m 90r/min	RUNNING CAPACITOR
GEAR SHAFT	90YS90GV11 90YR90GV11 90YT90GV11	90YB90GV11 90YF90GV11	90	Single phase 110	50Hz	1.70	90-1300	525	710	200	20μf/250V
ROUND SHAFT	90YS90DV11 90YR90DV11 90YT90DV11	90YB90DV11 90YF90DV11			60Hz	1.50	90-1600	420	710	200	
GEAR SHAFT	90YS90GV22 90YR90GV22 90YT90GV22	90YB90GV22 90YF90GV22	90	Single phase 220	50Hz	0.95	90-1300	525	710	200	5μf/450V
ROUND SHAFT	90YS90DV22 90YR90DV22 90YT90DV22	90YB90DV22 90YF90DV22			60Hz	0.86	90-1600	420	710	200	
GEAR SHAFT	90YS90GY22 90YB90GY22		90	Three phase 220	50Hz	0.69	90-1300	910	700		
ROUND SHAFT	90YS90DY22 90YB90DY22				60Hz	0.63	90-1600	730	560		
GEAR SHAFT	90YS90GY38 90YB90GY38		90	Three phase 380	50Hz	0.41	90-1300	910	700		
ROUND SHAFT	90YS90DY38 90YB90DY38				60Hz	0.38	90-1600	730	560		
GEAR SHAFT	90YS120GV11 90YR120GV11 90YT120GV11	90YB120GV11 90YF120GV11	120	Single phase 110	50Hz	2.04	90-1300	720	840	300	24μf/250V
ROUND SHAFT	90YS120DV11 90YR120DV11 90YT120DV11	90YB120DV11 90YF120DV11			60Hz	1.84	90-1600	600	840	300	
GEAR SHAFT	90YS120GV22 90YR120GV22 90YT120GV22	90YB120GV22 90YF120GV22	120	Single phase 220	50Hz	1.02	90-1300	720	840	300	6μf/450V
ROUND SHAFT	90YS120DV22 90YR120DV22 90YT120DV22	90YB120DV22 90YF120DV22			60Hz	0.92	90-1600	600	840	300	
GEAR SHAFT	90YS120GY22 90YB120GY22		120	Three phase 220	50Hz	0.89	90-1300	1195	924		
ROUND SHAFT	90YS120DY22 90YB120DY22				60Hz	0.81	90-1600	1014	750		
GEAR SHAFT	90YS120GY38 90YB120GY38		120	Three phase 380	50Hz	0.51	90-1300	1195	924		
ROUND SHAFT	90YS120GY38 90YB120GY38				60Hz	0.45	90-1600	1014	750		

▪Although the speed range of the motor is 50Hz, 90~1300r/min, 60Hz, 90~1600r/min, it easily causes overload and the cooling effect of the motor fan is poor if the speed is too low (<400r/min) and the motor torque decreases too much; therefore, please keep sufficient power margin and avoid operating in low speed section frequently. The optimal speed range of the motor is 50Hz, 400~1300r/min, 60Hz, 400~1600r/min.

▪When the power is cut off, the motor will stop immediately and hold the load.

REDUCTION RATIO PERFORMANCE CHART

REDUCTION RATIO			3	3.6	5	6	7.5	10	12.5	15	18	20	25	30
90W	50Hz	Max output speed r/min	433	361	260	217	173	130	104	87	72	65	52	43
		Rated torque N·m	1.79	2.14	2.98	3.57	4.46	5.29	6.61	7.93	9.52	10.58	12.07	14.48
	60Hz	Max output speed r/min	533	444	320	267	213	160	128	107	89	80	64	53
		Rated torque N·m	1.49	1.79	2.48	2.98	3.72	4.41	5.51	6.61	7.93	8.82	10.06	12.07
120W	50Hz	Max output speed r/min	433	361	260	217	173	130	104	87	72	65	52	43
		Rated torque N·m	2.25	2.70	3.75	4.50	5.62	6.88	8.60	10.31	12.38	13.75	15.43	18.51
	60Hz	Max output speed r/min	533	444	320	267	213	160	128	107	89	80	64	53
		Rated torque N·m	1.87	2.25	3.12	3.75	4.68	5.73	7.16	8.60	10.31	11.46	12.86	15.43

REDUCTION RATIO			36	40	50	60	75	90	100	120	150	180	200
90W	50Hz	Max output speed r/min	36	33	26	22	17	14	13	11	9	7	7
		Rated torque N·m	17.38	19.31	20	20	20	20	20	20	20	20	20
	60Hz	Max output speed r/min	44	40	32	27	21	18	16	13	11	9	8
		Rated torque N·m	14.48	16.09	20	20	20	20	20	20	20	20	20
120W	50Hz	Max output speed r/min	36	33	26	22	17	14	13	11	9	7	7
		Rated torque N·m	20	20	20	20	20	20	20	20	20	20	20
	60Hz	Max output speed r/min	44	40	32	27	21	18	16	13	11	9	8
		Rated torque N·m	18.51	20	20	20	20	20	20	20	20	20	20

▪The speed in the table is the value of average motor speed (50Hz: 1300r/min, 60Hz: 1600r/min) divided by the reduction ratio.

▪The actual speed changes according to the load (±8%).

STANDARD GEARBOX
90GF □H

EARED GEARBOX
90GF □HE

RIGHT ANGLE HOLLOW GEARBOX
L90GF □RC

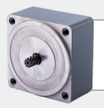

INTERMEDIATE GEARBOX
90GM10

RIGHT ANGLE SOLID GEARBOX
L90GF □RT

□ indicates the reduction ratio (1:3~200); MIDDLE GEARBOX:(1 : 10)

DIMENSIONS (CAD)

90/120YS/YR/YT/YB/YF01

Round-axis motor,weight:3kg

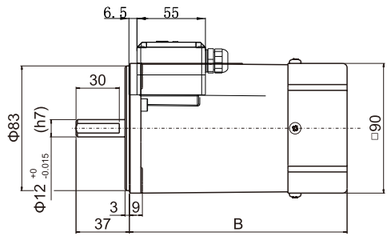

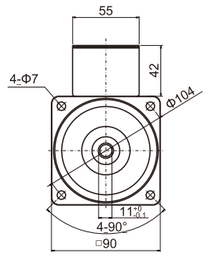

No.	Motor type	B
1	YS/YR	140
2	YT	151
3	YB	175
4	YF	187

90/120YS/YR/YT/YB/YF02

Combination:motor+standard gearbox(reduction ratio:1:3~200),weight:4.2kg

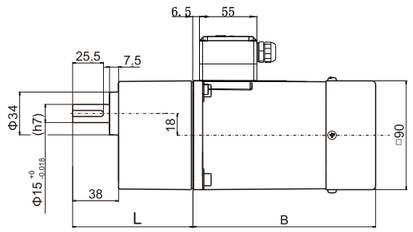

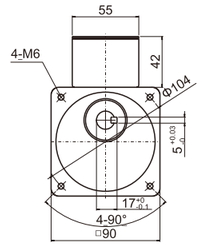

No.	Motor type	B	Reduction ratio	L
1	YS/YR	140	≤10	80
2	YT	151	>10	99.5
3	YB	175		
4	YF	187		

90/120YS/YR/YT/YB/YF03

Combination:motor+intermediate gearbox+standard gearbox(reduction ratio:1:200~1800),weight:5.1kg

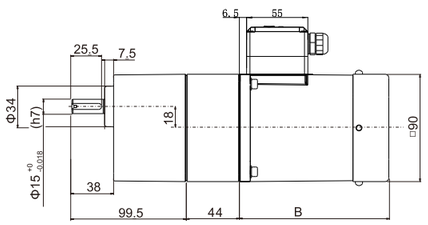

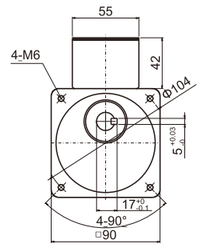

No.	Motor type	B
1	YS/YR	140
2	YT	151
3	YB	175
4	YF	187

DIMENSIONS (CAD)

90/120YS/YR/YT/YB/YF04

Combination:motor+eared gear (reduction ratio:1:3~200),weight:4.2kg

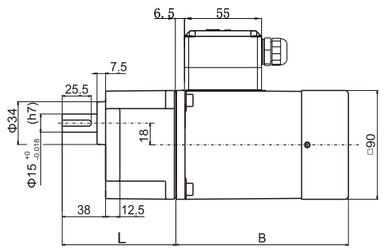

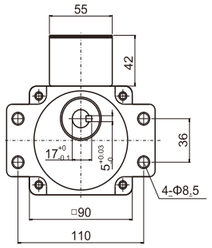

No.	Motor type	B	Reduction ratio	L
1	YS/YR	140	≤10	80
2	YT	151	>10	99.5
3	YB	175		
4	YF	187		

90/120YS/YR/YT/YB/YF05

Combination:motor+intermediate gearbox+eared gear (reduction ratio:1:200~1800),weight:5.1kg

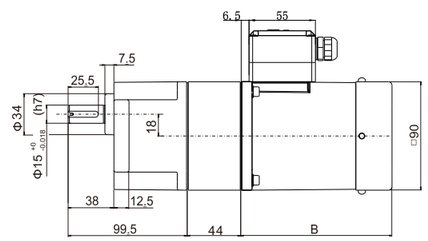

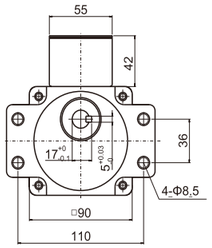

No.	Motor type	B
1	YS/YR	140
2	YT	151
3	YB	175
4	YF	187

90/120YS/YR/YT/YB/YF06

Combination:motor+right angle solid gearbox(reduction ratio: 1:3~200),weight:6.2kg

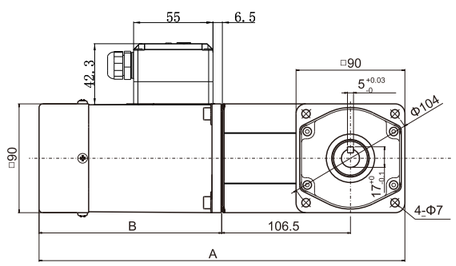

90/120YS/YR/YT/YB/YF07

Combination:motor+intermediate gearbox+right angle solid gearbox(reduction ratio:1:200~1800),weight:7.1kg

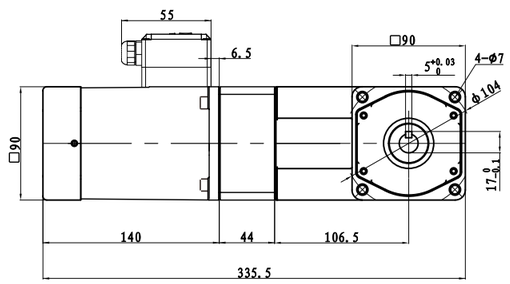

DIMENSIONS (CAD)

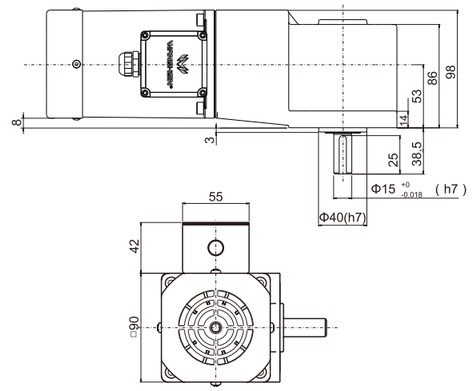

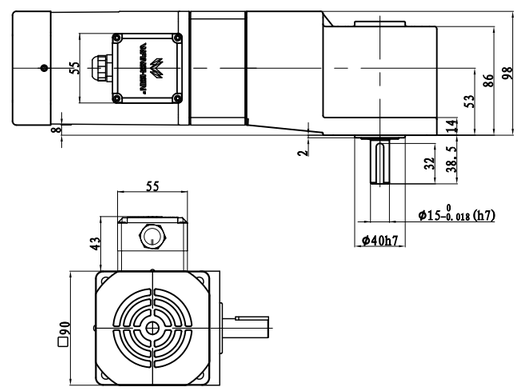

90/120YS/YR/YT/YB/YF08

Combination:motor+right angle hollow gearbox(reduction ratio:1:3~200), weight:6kg

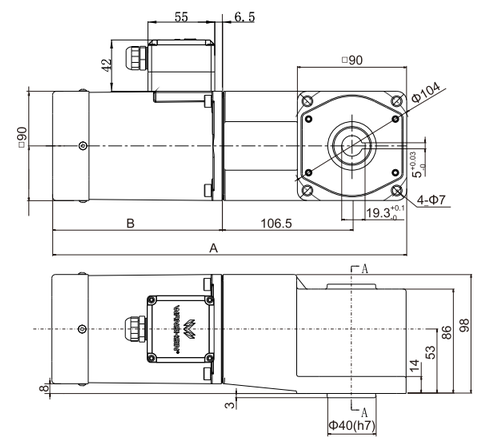

90/120YS/YR/YT/YB/YF09

Combination:motor+intermediate gearbox+right angle hollow gearbox (reduction ratio:1:200~1800),weight:6.9kg

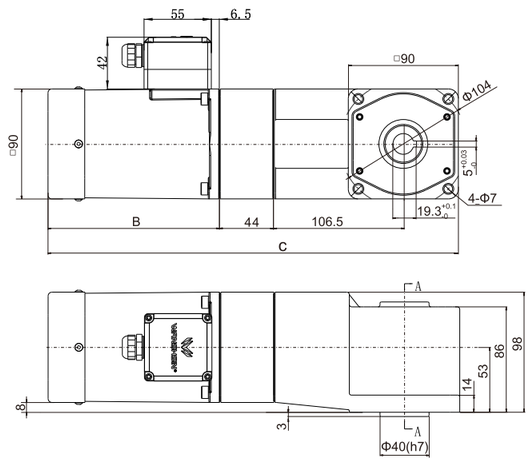

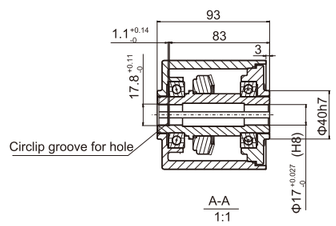

No.	Motor type	A	B	C
1	YS/YR	291.5	140	335.5
2	YT	302.5	151	346.5
3	YB	326.5	175	370.5
4	YF	338.5	187	382.5

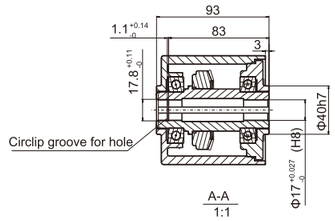

140W 160W

□100×100mm

MOTOR PERFORMANCE

MODEL		MAX. OUTPUT POWER W	VOLT. V	FREQUENCY Hz	CURRENT A	SPEED RANGE r/min	START TORQUE mN·m	RATED TORQUE mN·m 1200r/min	RATED TORQUE mN·m 90r/min	RUNNING CAPACITOR
GEAR SHAFT	100YS140GV11 100YT140GV11 100YB140GV11 100YF140GV11	140	Single phase 110	50Hz	2.26	90-1300	840	1050	350	28μf/250V
ROUND SHAFT	100YS140DV11 100YT140DV11 100YB140DV11 100YF140DV11			60Hz	2.10	90-1600	680	1050	350	
GEAR SHAFT	100YS140GV22 100YT140GV22 100YB140GV22 100YF140GV22	140	Single phase 220	50Hz	1.13	90-1300	840	1050	350	8μf/450V
ROUND SHAFT	100YS140DV22 100YT140DV22 100YB140DV22 100YF140DV22			60Hz	1.05	90-1600	680	1050	350	
GEAR SHAFT	100YS140GY22 100YB140GY22	140	Three phase 220	50Hz	0.95	90-1300	1393	1078		
ROUND SHAFT	100YS140DY22 100YB140DY22			60Hz	0.88	90-1600	1183	875		
GEAR SHAFT	100YS140GY38 100YB140GY38	140	Three phase 380	50Hz	0.55	90-1300	1393	1078		
ROUND SHAFT	100YS140DY38 100YB140DY38			60Hz	0.48	90-1600	1183	875		
GEAR SHAFT	100YS160GV11 100YT160GV11 100YB160GV11 100YF160GV11	160	Single phase 110	50Hz	2.60	90-1300	900	1250		28μf/250V
ROUND SHAFT	100YS160DV11 100YT160DV11 100YB160DV11 100YF160DV11			60Hz	2.34	90-1600	750	1250		
GEAR SHAFT	100YS160GV22 100YT160GV22 100YB160GV22 100YF160GV22	160	Single phase 220	50Hz	1.30	90-1300	900	1250		8μf/450V
ROUND SHAFT	100YS160DV22 100YT160DV22 100YB160DV22 100YF160DV22			60Hz	1.17	90-1600	750	1250		
GEAR SHAFT	100YS160GY22 100YB160GY22	160	Three phase 220	50Hz	1.21	90-1300	1590	1248		
ROUND SHAFT	100YS160DY22 100YB160DY22			60Hz	1.09	90-1600	1353	1005		
GEAR SHAFT	100YS160GY38 100YB160GY38	160	Three phase 380	50Hz	0.70	90-1300	1590	1248		
ROUND SHAFT	100YS160DY38 100YB160DY38			60Hz	0.50	90-1600	1353	1005		

▪Although the speed range of the motor is 50Hz, 90~1300r/min, 60Hz, 90~1600r/min, it easily causes overload and the cooling effect of the motor fan is poor if the speed is too low (<400r/min) and the motor torque decreases too much; therefore, please keep sufficient power margin and avoid operating in low speed section frequently. The optimal speed range of the motor is 50Hz, 400~1300r/min, 60Hz, 400~1600r/min.

▪When the power is cut off, the motor will stop immediately and hold the load.

REDUCTION RATIO PERFORMANCE CHART

REDUCTION RATIO			3	3.6	5	6	7.5	10	12.5	15	18	20	25	30
140W	50Hz	Output bearing speed r/min	433	361	260	217	173	130	104	87	72	65	52	43
		Rated torque N·m	2.62	3.15	4.37	5.25	6.56	7.51	9.38	11.26	13.51	15.02	18.77	21.91
	60Hz	Output bearing speed r/min	533	444	320	267	213	160	128	107	89	80	64	53
		Rated torque N·m	2.19	2.62	3.64	4.37	5.46	6.26	7.82	9.38	11.26	12.51	15.64	18.26
160W	50Hz	Output bearing speed r/min	433	361	260	217	173	130	104	87	72	65	52	43
		Rated torque N·m	2.76	3.31	4.60	5.52	6.90	9.20	11.5	13.8	16.56	18.4	23.0	27.6
	60Hz	Output bearing speed r/min	533	444	320	267	213	160	128	107	89	80	64	53
		Rated torque N·m	2.48	2.98	4.14	4.97	6.21	8.28	10.35	12.42	14.9	16.56	20.7	24.84

REDUCTION RATIO			36	40	50	60	75	90	100	120	150	180	200
140W	50Hz	Output bearing speed r/min	36	33	26	22	17	14	13	11	9	7	7
		Rated torque N·m	26.29	29.21	33.94	40.73	44	44	44	44	44	44	44
	60Hz	Output bearing speed r/min	44	40	32	27	21	18	16	13	11	9	8
		Rated torque N·m	21.91	24.34	28.28	33.94	40.73	44	44	44	44	44	44
160W	50Hz	Output bearing speed r/min	36	33	26	22	17	14	13	11	9	7	7
		Rated torque N·m	33.12	36.8	44	44	44	44	44	44	44	44	44
	60Hz	Output bearing speed r/min	44	40	32	27	21	18	16	13	11	9	8
		Rated torque N·m	29.80	33.12	44	44	44	44	44	44	44	44	44

▪The speed in the table is the value of average motor speed (50Hz: 1300r/min, 60Hz: 1600r/min) divided by the reduction ratio.

▪The actual speed changes according to the load (±8%).

STANDARD GEARBOX
100GF □H

RIGHT ANGLE HOLLOW GEARBOX
L100GF □RC

RIGHT ANGLE SOLID GEARBOX
L100GF □RT

□ indicates the reduction ratio (1:3~200)

180W 200W

□100×100mm

MOTOR PERFORMANCE

MODEL		MAX. OUTPUT POWER W	VOLT. V	FREQUENCY Hz	CURRENT A	SPEED RANGE r/min	START TORQUE mN·m	RATED TORQUE mN·m 1200r/min	RATED TORQUE mN·m 90r/min	RUNNING CAPACITOR
GEAR SHAFT	100YS180GV11 100YT180GV11 100YB180GV11 100YF180GV11	180	Single phase 110	50Hz	3.00	90-1300	1050	1450		32μf/250V
ROUND SHAFT	100YS180DV11 100YT180DV11 100YB180DV11 100YF180DV11			60Hz	2.70	90-1600	880	1450		
GEAR SHAFT	100YS180GV22 100YT180GV22 100YB180GV22 100YF180GV22	180	Single phase 220	50Hz	1.50	90-1300	1050	1450		10μf/450V
ROUND SHAFT	100YS180DV22 100YT180DV22 100YB180DV22 100YF180DV22			60Hz	1.35	90-1600	880	1450		
GEAR SHAFT	100YS180GY22 100YB180GY22	180	Three phase 220	50Hz	1.30	90-1300	1790	1418		
ROUND SHAFT	100YS180DY22 100YB180DY22			60Hz	1.17	90-1600	1523	1135		
GEAR SHAFT	100YS180GY38 100YB180GY38	180	Three phase 380	50Hz	0.75	90-1300	1790	1418		
ROUND SHAFT	100YS180DY38 100YB180DY38			60Hz	0.67	90-1600	1523	1135		
GEAR SHAFT	100YS200GV11 100YT200GV11 100YB200GV11 100YF200GV11	200	Single phase 110	50Hz	3.38	90-1300	1150	1650		32μf/250V
ROUND SHAFT	100YS200DV11 100YT200DV11 100YB200DV11 100YF200DV11			60Hz	3.08	90-1600	930	1330		
GEAR SHAFT	100YS200GV22 100YT200GV22 100YB200GV22 100YF200GV22	200	Single phase 220	50Hz	1.69	90-1300	1150	1650		10μf/450V
ROUND SHAFT	100YS200DV22 100YT200DV22 100YB200DV22 100YF200DV22			60Hz	1.54	90-1600	930	1330		
GEAR SHAFT	100YS200GY22 100YB200GY22	200	Three phase 220	50Hz	1.82	90-1300	1990	1540		
ROUND SHAFT	100YS200DY22 100YB200DY22			60Hz	1.64	90-1600	1690	1250		
GEAR SHAFT	100YS200GY38 100YB200GY38	200	Three phase 380	50Hz	1.05	90-1300	1990	1540		
ROUND SHAFT	100YS200DY38 100YB200DY38			60Hz	0.95	90-1600	1690	1250		

▪Although the speed range of the motor is 50Hz, 90~1300r/min, 60Hz, 90~1600r/min, it easily causes overload and the cooling effect of the motor fan is poor if the speed is too low (<400r/min) and the motor torque decreases too much; therefore, please keep sufficient power margin and avoid operating in low speed section frequently. The optimal speed range of the motor is 50Hz, 400~1300r/min, 60Hz, 400~1600r/min.

▪When the power is cut off, the motor will stop immediately and hold the load.

REDUCTION RATIO PERFORMANCE CHART

REDUCTION RATIO			3	3.6	5	6	7.5	10	12.5	15	18	20	25	30
180W	50Hz	Output bearing speed r/min	433	361	260	217	173	130	104	87	72	65	52	43
		Rated torque N·m	3.10	3.72	5.16	6.19	7.74	10.32	12.9	15.48	18.58	20.64	25.8	30.96
	60Hz	Output bearing speed r/min	533	444	320	267	213	160	128	107	89	80	64	53
		Rated torque N·m	2.76	3.31	4.60	5.52	6.90	9.20	11.50	13.80	16.56	18.40	23.0	27.6
200W	50Hz	Output bearing speed r/min	433	361	260	217	173	130	104	87	72	65	52	43
		Rated torque N·m	3.44	4.13	5.73	6.88	8.60	11.46	14.33	17.19	18.51	20.57	25.71	30.85
	60Hz	Output bearing speed r/min	533	444	320	267	213	160	128	107	89	80	64	53
		Rated torque N·m	2.87	3.44	4.78	5.73	7.16	9.55	11.94	14.33	15.43	17.14	21.43	25.71

REDUCTION RATIO			36	40	50	60	75	90	100	120	150	180	200
180W	50Hz	Output bearing speed r/min	36	33	26	22	17	14	13	11	9	7	7
		Rated torque N·m	37.15	41.28	44	44	44	44	44	44	44	44	44
	60Hz	Output bearing speed r/min	44	40	32	27	21	18	16	13	11	9	8
		Rated torque N·m	33.48	37.2	44	44	44	44	44	44	44	44	44
200W	50Hz	Output bearing speed r/min	36	33	26	22	17	14	13	11	9	7	7
		Rated torque N·m	37.02	41.14	44	44	44	44	44	44	44	44	44
	60Hz	Output bearing speed r/min	44	40	32	27	21	18	16	13	11	9	8
		Rated torque N·m	30.85	34.28	42.85	44	44	44	44	44	44	44	44

▪The speed in the table is the value of average motor speed (50Hz: 1300r/min, 60Hz: 1600r/min) divided by the reduction ratio.

▪The actual speed changes according to the load (±8%).

STANDARD GEARBOX
100GF □H

RIGHT ANGLE HOLLOW GEARBOX
L100GF □RC

RIGHT ANGLE SOLID GEARBOX
L100GF □RT

□ indicates the reduction ratio (1:3~200)

250W □100×100mm

MOTOR PERFORMANCE

MODEL			MAX. OUTPUT POWER W	VOLT. V	FREQUENCY Hz	CURRENT A	SPEED RANGE r/min	START TORQUE mN·m	RATED TORQUE mN·m 1200r/min	RATED TORQUE mN·m 90r/min	RUNNING CAPACITOR
GEAR SHAFT	100YS250GV11 100YT250GV11	100YB250GV11 100YF250GV11	250	Single phase 110	50Hz	3.60	90-1300	1250	1850		40uf/250V
ROUND SHAFT	100YS250DV11 100YT250DV11	100YB250DV11 100YF250DV11			60Hz	2.24	90-1600	980	1850		
GEAR SHAFT	100YS250GV22 100YT250GV22	100YB250GV22 100YF250GV22	250	Single phase 220	50Hz	1.80	90-1300	1250	1850		12uf/450V
ROUND SHAFT	100YS250DV22 100YT250DV22	100YB250DV22 100YF250DV22			60Hz	1.62	90-1600	980	1850		
GEAR SHAFT	100YS250GY22 100YB250GY22		250	Three phase 220	50Hz	1.82	90-1300	2110	1670		
ROUND SHAFT	100YS250DY22 100YB250DY22				60Hz	1.64	90-1600	1860	1380		
GEAR SHAFT	100YS250GY38 100YB250GY38		250	Three phase 380	50Hz	1.05	90-1300	2110	1670		
ROUND SHAFT	100YS250DY38 100YB250DY38				60Hz	0.95	90-1600	1860	1380		

▪Although the speed range of the motor is 50Hz, 90~1300r/min, 60Hz, 90~1600r/min, it easily causes overload and the cooling effect of the motor fan is poor if the speed is too low (<400r/min) and the motor torque decreases too much; therefore, please keep sufficient power margin and avoid operating in low speed section frequently. The optimal speed range of the motor is 50Hz, 400~1300r/min, 60Hz, 400~1600r/min.
▪When the power is cut off, the motor will stop immediately and hold the load.

REDUCTION RATIO PERFORMANCE CHART

REDUCTION RATIO			3	3.6	5	6	7.5	10	12.5	15	18	20	25	30
250W	50Hz	Max output speed r/min	433	361	260	217	173	130	104	87	72	65	52	43
		Rated torque N·m	4.26	5.11	7.1	8.52	10.65	14.2	17.75	21.3	25.56	28.4	35.5	42.6
	60Hz	Max output speed r/min	533	444	320	267	213	160	128	107	89	80	64	53
		Rated torque N·m	3.83	4.6	639	7.67	9.59	12.78	15.98	19.17	23	25.56	31.95	38.34
REDUCTION RATIO			36	40	50	60	75	90	100	120	150	180	200	
140W	50Hz	Max output speed r/min	36	33	26	22	17	14	13	11	9	7	7	
		Rated torque N·m	44	44	44	44	44	44	44	44	44	44	44	
	60Hz	Max output speed r/min	44	40	32	27	21	18	16	13	11	9	8	
		Rated torque N·m	44	44	44	44	44	44	44	44	44	44	44	

▪The speed in the table is the value of average motor speed (50Hz: 1300r/min, 60Hz: 1600r/min) divided by the reduction ratio.
▪The actual speed changes according to the load (±8%).


STANDARD GEARBOX
100GF □H


RIGHT ANGLE HOLLOW GEARBOX
L100GF □RC


RIGHT ANGLE SOLID GEARBOX
L100GF □RT

□ indicates the reduction ratio (1:3~200)

DIMENSIONS (CAD)

140/160/180/200/250YS/YT/YB/YF01

Round-axis motor,weight:4.6kg

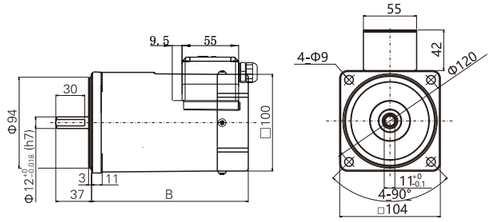

140/160/180/200/250YS/YT/YB/YF02

Combination:motor+standard gearbox(reduction ratio:1:3~200), weight:6.8kg

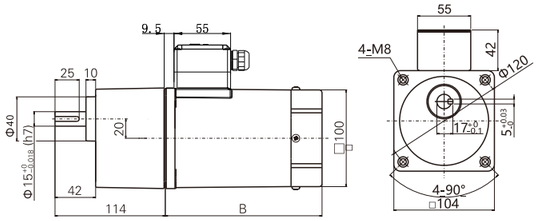

140/160/180/200/250YS/YT/YB/YF03

Combination:motor+right angle solid gearbox
reduction ratio:1:3~200
weight:8.8kg

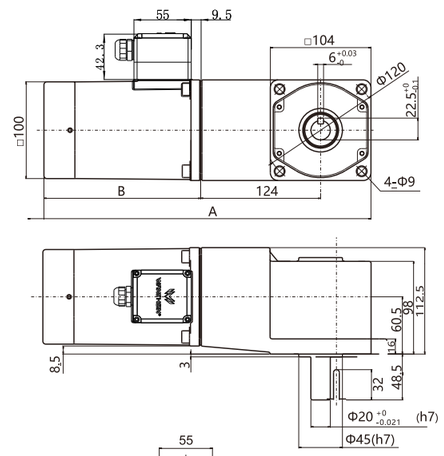

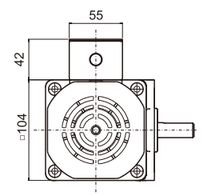

No.	Motor type	A	B
1	YS	338	162
2	YT	354	178
3	YB	368	192
4	YF	390	214

140/160/180/200/250YS/YT/YB/YF04

Combination:motor+right angle hollow gearbox
reduction ratio:1:3~200
weight:8.6kg

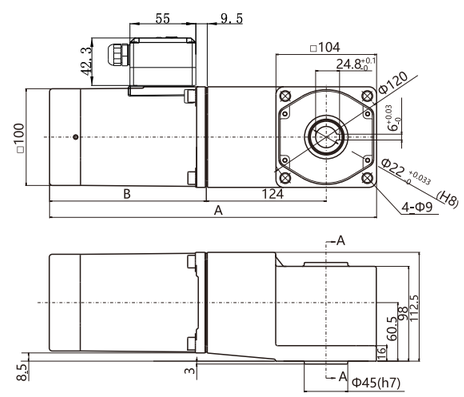

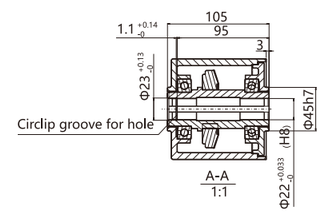

DIGITAL SPEED CONTROLLER

FEATURES

- Achieve continuously variable transmission in a wide range combined with variable speed motor
- Feature-rich, enabling slow acceleration, slow deceleration and motor stall protection.
- The capacitor for speed governor running is mounted directly inside the governor, featuring neat and convenient wiring.

Digital speed controller

WS-L dimensions

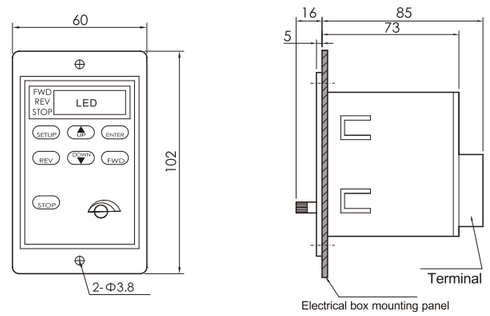

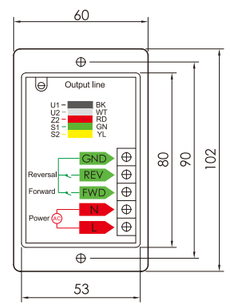

MODEL PARAMETERS

MODEL	WS-L
INSTALLATION METHOD	Digital panel
SPEED REGULATION	Panel Key and potentiometer
SUPPLY VOLTAGE	Single phase 220Vac
FUNCTIONS	Speed control, slow acceleration, slow deceleration, electronic brake, stall protection, panel control forward and reverse rotation, speed display, Digital display key controlled, it will be remembered, ratio setting and choose external switchK1 AND K2 Can connect with PLC to control directly.
APPLICABLE MOTOR POWER RANGE	6W~200W
RUNNING CAPACITOR	Built-in
POWER FREQUENCY	50/60Hz
SPEED RANGE	50Hz:90~1300r/min 60Hz:90~1600r/min
RATE OF SPEED CHANGE	5%
ELECTRONIC BRAKING TIME	0.4 sec
ENVIRONMENT OF USE	-10°C~+40°C No freezing,<85%(No condensation)

PANEL SPEED CONTROLLER

FEATURES

- Achieve continuously variable transmission in a wide range combined with variable speed motor
- Feature-rich, enabling slow acceleration, slow deceleration and motor stall protection.
- The capacitor for speed governor running is mounted directly inside the governor, featuring neat and convenient wiring.

Panel speed controller

WS-P dimensions

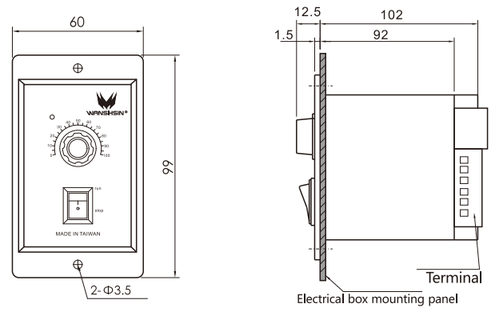

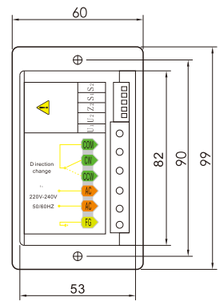

MODEL PARAMETERS

MODEL	WS-P
INSTALLATION METHOD	Panel
SPEED REGULATION	Panel potentiometer
SUPPLY VOLTAGE	Single phase 220V
FUNCTIONS	Speed control, slow acceleration, slow deceleration, stall protection
APPLICABLE MOTOR POWER RANGE	6W~200W
RUNNING CAPACITOR	Built-in
POWER FREQUENCY	50/60Hz
SPEED RANGE	50Hz:90~1300r/min 60Hz:90~1600r/min
RATE OF SPEED CHANGE	5%
ENVIRONMENT OF USE	-10°C~+40°C No freezing,<85%(No condensation)

MULTI-FUNCTION SPEED CONTROLLER

FEATURES

- Achieve continuously variable transmission in a wide range combined with variable speed motor
- Feature-rich, enabling slow acceleration, slow deceleration and motor stall protection.
- The capacitor for speed governor running is mounted directly inside the governor, featuring neat and convenient wiring.

Multi-function speed controller

WX-K dimensions

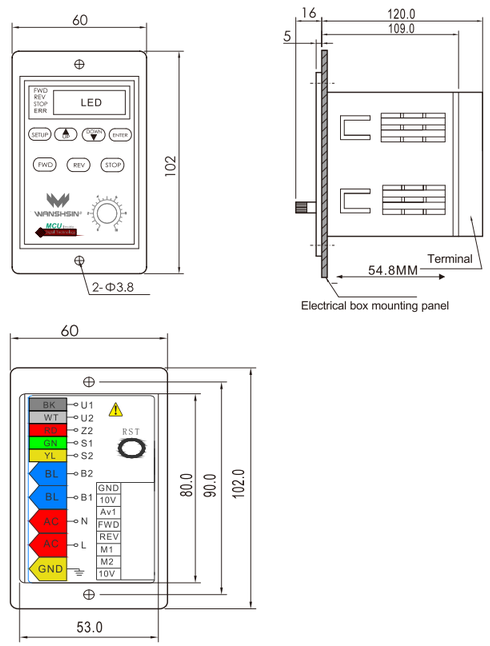

MODEL PARAMETERS

MODEL	WX-K
INSTALLATION METHOD	Multi-Function(Built-in)
SPEED REGULATION	Panel Key and potentiometer
SUPPLY VOLTAGE	Single phase 220Vac
FUNCTIONS	Speed control, slow acceleration, slow deceleration, electronic brake, stall protection, panel control Forward and reverse rotation, speed display, Digital display key controlled, it will be remembered, ratio Setting, 4 stage speed, the electromagnetic brake stop, RST function. 0~10V analog controlled and choose external Switch K1 AND K2 Can connect with PLC to control directly.
APPLICABLE MOTOR POWER RANGE	6W~200W
RUNNING CAPACITOR	Built-in
POWER FREQUENCY	50/60Hz
SPEED RANGE	50Hz:90~1300r/min 60Hz:90~1600r/min
RATE OF SPEED CHANGE	5%
ELECTRONIC BRAKING TIME	0.4 sec
ENVIRONMENT OF USE	-10℃~+40℃ No freezing,<85%(No condensation)

INSTALLATION OF PANEL SPEED GOVERNOR

Hole size of WS-P control panel

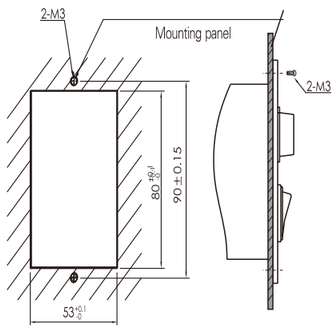

Hole size of WS-L control panel

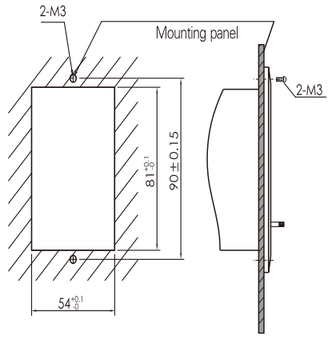

Hole size of WX-K control panel

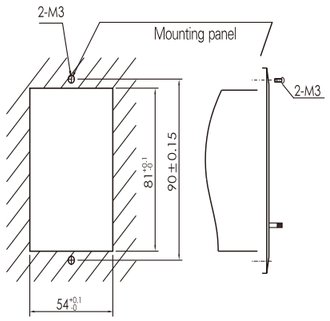

Put the governor into the hole in the direction shown, and tighten the screws.

WIRING METHOD

Unidirectional rotation

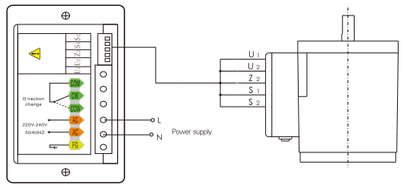

Forward and reverse rotation

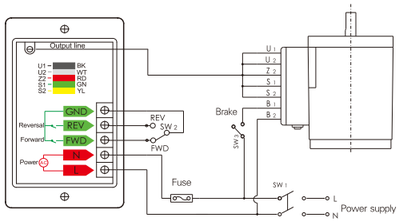

Drawing the speed controller

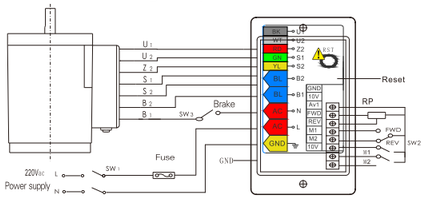

DIRECTION OF ROTATION

When the governor is delivered, the cord of rotation direction selection has been connected to the L and FWD terminal, and the motor rotates clockwise; to make the motor rotate counterclockwise, just connect the cord to the REV terminal. For forward and reverse rotation, connect FWD and REV terminals to the rotation direction selector switch Sw2.

Note: Model WS-L allows controlling forward and reverse rotation with the panel button, or manually connect rear panel wiring.

MOTOR BRAKE STOPS

When the motor stops running, disconnect SW3, the de-energized electromagnetic brake in the motor brakes, and the motor brakes and maintains the load. In the normal operation of the motor, it is not allowed to disconnect SW3, or else the motor and the de-energized electromagnetic brake in the motor will burn.

- Special Note

When B1 and B2 are energized, the de-energized electromagnetic brake won't brake; when B1 and B2 are de-energized, the de-energized electromagnetic brake brakes. Brake power switch must be synchronized with the motor speed control switch.

Running Operation

Connect the speed governor to the motor as shown in the figure,and then turn on the AC power.Close Sw3, the de-energized electromagnetic brake in the motor is energized ,and the electromagnetic brake fails; the switch on the turns to RUN, and the motor starts to rotate.

Speed Adjustment

Rotate the speed control knob clockwise on the panel, and the motor speed increases; the range of adjustment: 50Hz: 90 ~1300r/min; 60Hz:90~1600r/min.

- Special Note

Do not use SW1 power switch as the start/stop speed governor of running/brake switch and stop braking with the motor and hold the load, or else it will damage the speed governor easily. At present, internal circuit needs time to charge when the speed governor is turned on every time, the motor won't be started immediately, and the action will be abnormal.

STOP

Turn the switch on the governor panel to STOP, and the motor stops.

NOTE: This switch is not a power switch. If the motor stops running for a long time, please equip a separate power switch.

External Connect

Note: Model WX-K allows controlling forward and reverse rotation with the panel button, or Choose External switch control, FWD&REV buttons connect with external switch K1&K2 to motor,K1.K2 can connect witch PLC to control motor directly.

External connect potentiometer with 0-10V Analog AVI input port.

DC GEAR MOTOR

60DC

10W/15W/20W

MOTOR PERFORMANCE

MODEL	VOLT. V	POWER W	LOAD PARAMETERS SPEED r/min	TORQUE kg·cm	CURRENT A≤	BRUSH LIFE h	MOTOR WEIGHT kg
60DC10GV12R16	12	10	1600	0.62	1.24	2000	0.7
60DC10GV24R16	24	10	1600	0.62	0.62	2000	0.7
60DC15GV12R16	12	15	1600	0.93	1.87	2000	0.9
60DC15GV24R16	24	15	1600	0.93	0.93	2000	0.9
60DC20GV12R16	12	20	1600	1.24	2.49	2000	0.9
60DC20GV24R16	24	20	1600	1.24	1.24	2000	0.9

REDUCTION RATIO PERFORMANCE CHART

SPEED r/min	REDUCTION RATIO	3	3.6	5	6	7.5	10	12.5	15	18	20	25	30
1600	Output bearing speed r/min	533	444	320	267	213	160	128	107	89	80	64	53
	Rated torque N·m	0.129	0.154	0.215	0.259	0.324	0.43	0.53	0.64	0.769	0.77	0.97	1.16
SPEED r/min	REDUCTION RATIO	36	40	50	60	75	90	100	120	150	180	200	
1600	Output bearing speed r/min	44	40	32	27	21	18	16	13	11	9	8	
	Rated torque N·m	1.39	1.55	1.93	2.32	3	3	3	3	3	3	3	

STANDARD GEARBOX
60GK □H

□ indicates the reduction ratio (1:3~200)

DIMENSIONS (CAD)

60DC(10W/15W)

Round-axis motor

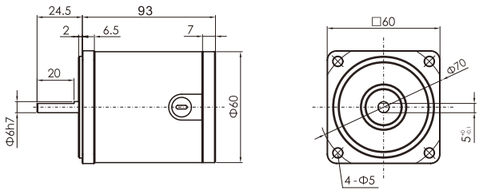

60DC(10W/15W)

Combination:motor + standard gearbox (reduction ratio: 1:3~200)

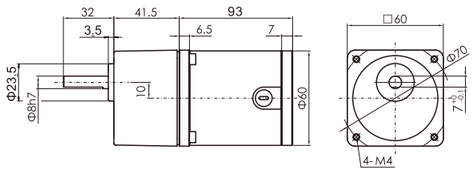

70DC

20W/30W

MOTOR PERFORMANCE

MODEL	VOLT. V	POWER W	LOAD PARAMETERS SPEED r/min	TORQUE kg·cm	CURRENT A≤	BRUSH LIFE h	MOTOR WEIGHT kg
70DC20GV12R16	12	20	1600	1.24	2.49	2000	1.0
70DC20GV24R16	24	20	1600	1.24	1.24	2000	1.0
70DC20GV90R16	90	20	1600	1.24	0.33	2000	1.0
70DC30GV12R16	12	30	1600	1.86	3.73	2000	1.1
70DC30GV24R16	24	30	1600	1.86	1.87	2000	1.1
70DC30GV90R16	90	30	1600	1.86	0.50	2000	1.1

REDUCTION RATIO PERFORMANCE CHART

SPEED r/min	REDUCTION RATIO	3	3.6	5	6	7.5	10	12.5	15	18	20	25	30
1600	Output bearing speed r/min	533	444	320	267	213	160	128	107	89	80	64	53
	Rated torque N·m	0.26	0.31	0.43	0.52	0.86	0.86	1.08	1.29	1.39	1.55	1.93	2.32
SPEED r/min	REDUCTION RATIO	36	40	50	60	75	90	100	120	150	180	200	
1600	Output bearing speed r/min	44	40	32	27	21	18	16	13	11	9	8	
	Rated torque N·m	2.78	3.09	3.86	4.46	5	5	5	5	5	5	5	

STANDARD GEARBOX
70GK □H

□ indicates the reduction ratio (1:3~200)

DIMENSIONS (CAD)

70DC(20W/36W)

Round-axis motor

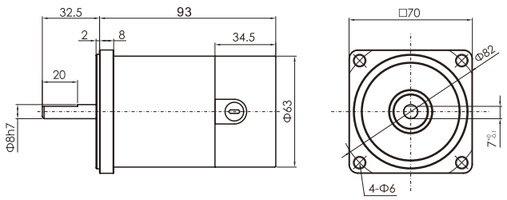

70DC(20W/36W)

Combination: motor + standard gearbox (reduction ratio: 1:3~200)

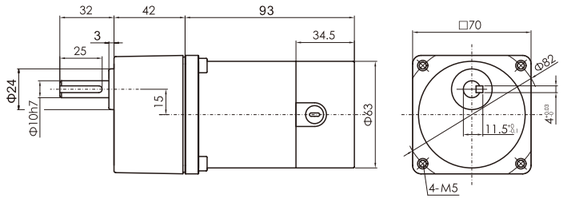

80DC

30W/60W

MOTOR PERFORMANCE

MODEL	VOLT. V	POWER W	LOAD PARAMETERS SPEED r/min	TORQUE kg·cm	CURRENT A≤	BRUSH LIFE h	MOTOR WEIGHT kg
80DC30GV12R16	12	30	1600	1.86	3.73	2000	1.8
80DC30GV24R16	24	30	1600	1.86	1.87	2000	1.8
80DC30GV90R16	90	30	1600	1.86	0.50	2000	1.8
80DC60GV12R16	12	60	1600	3.73	7.46	2000	1.9
80DC60GV24R16	24	60	1600	3.73	3.73	2000	1.9
80DC60GV90R16	90	60	1600	3.73	1.00	2000	1.9

REDUCTION RATIO PERFORMANCE CHART

SPEED r/min	REDUCTION RATIO	3	3.6	5	6	7.5	10	12.5	15	18	20	25	30
1600	Output bearing speed r/min	533	444	320	267	213	160	128	107	89	80	64	53
	Rated torque N·m	0.386	0.464	0.644	0.773	0.966	1.288	1.61	1.932	2.318	2.576	3.22	3.477
SPEED r/min	REDUCTION RATIO	36	40	50	60	75	90	100	120	150	180	200	
1600	Output bearing speed r/min	44	40	32	27	21	18	16	13	11	9	8	
	Rated torque N·m	4.173	4.63	5.796	6.995	8	8	8	8	8	8	8	

STANDARD GEARBOX
80GK □H

RIGHT ANGLE HOLLOW GEARBOX
L80GK □RC

RIGHT ANGLE SOLID GEARBOX
L80GK □RT

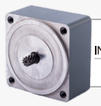

INTERMEDIATE GEARBOX
80GM10

□ indicates the reduction ratio (1:3~200); middle gearbox: (1 : 10)

DIMENSIONS (CAD)

80DC(30W/60W)

Round-axis motor

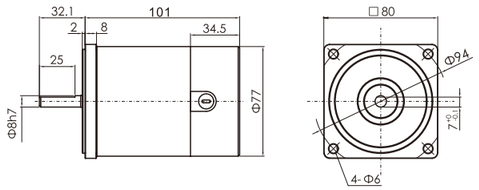

80DC(30W/60W)

Combination:motor + standard gearbox (reduction ratio: 1:3~200)

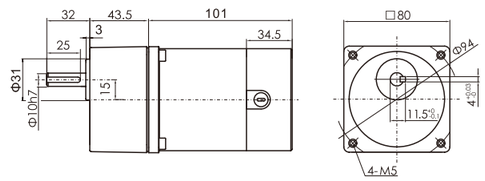

80DC(30W/60W)

Combination:motor+intermediate gearbox+standard gearbox(reduction ratio:1:200~1800)

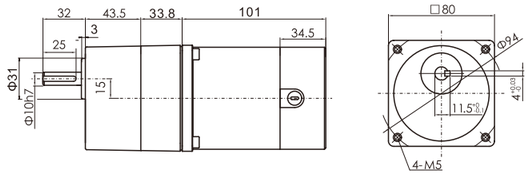

80DC(30W/60W)

Combination: motor + right angle solid gearbox
Reduction ratio: 1:3~200

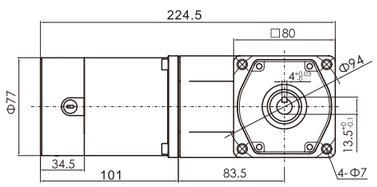

80DC(30W/60W)

Combination:motor+intermediate gearbox+right angle solid gearbox
Reduction ratio:1:200~1800

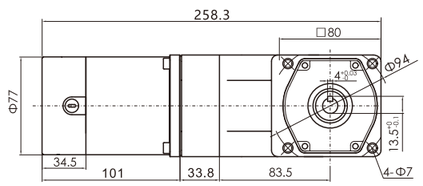

DIMENSIONS (CAD)

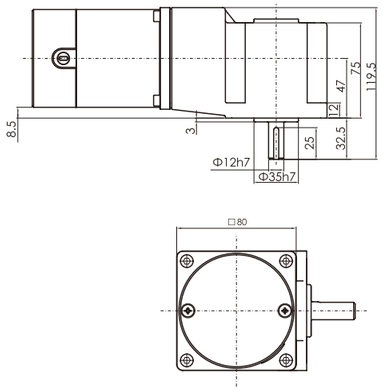

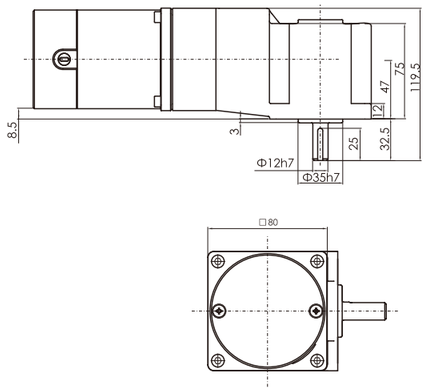

80DC(30W/60W)

Combination: motor + right angle hollow gearbox
Reduction ratio: 1:3~200

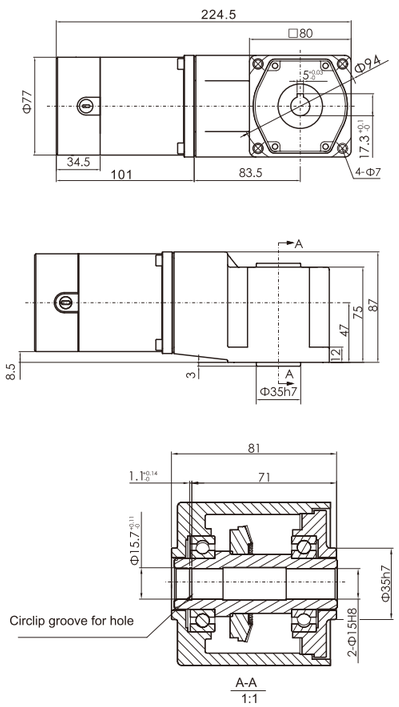

80DC(30W/60W)

Combination:motor+intermediate gearbox+right angle hollow gearbox
(reduction ratio:1:200~1800)

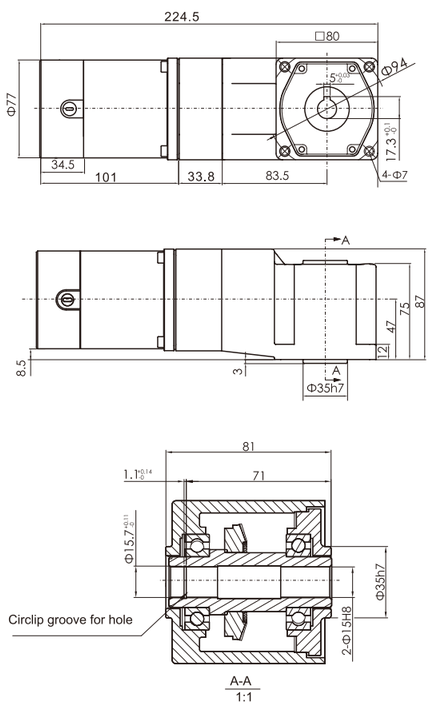

90DC

40W/70W
65W/120W
100W/200W

MOTOR PERFORMANCE

MODEL	VOLT. V	POWER W	LOAD PARAMETERS SPEED r/min	TORQUE kg·cm	CURRENT A≤	BRUSH LIFE h	MOTOR WEIGHT kg
90DC40GV12R16	12	40	1600	2.48	4.98	2000	1.9
90DC40GV24R16	24	40	1600	2.48	2.49	2000	1.9
90DC40GV90R16	90	40	1600	2.48	0.66	2000	1.9
90DC70GV12R16	12	70	1600	4.35	8.71	2000	2.0
90DC70GV24R16	24	70	1600	4.35	4.35	2000	2.0
90DC70GV90R16	90	70	1600	4.35	1.16	2000	2.0
90DC65GV12R16	12	65	1600	4.04	8.08	2000	2.0
90DC65GV24R16	24	65	1600	4.04	4.04	2000	2.0
90DC65GV90R16	90	65	1600	4.04	1.08	2000	2.0
90DC65GV180R16	180	65	1600	4.04	0.54	2000	2.0
90DC120GV12R16	12	120	1600	7.45	14.93	2000	2.2
90DC120GV24R16	24	120	1600	7.45	7.46	2000	2.2
90DC120GV90R16	90	120	1600	7.45	1.99	2000	2.2
90DC120GV180R16	180	120	1600	7.45	1.00	2000	2.2
90DC100GV12R16	12	100	1600	6.21	12.44	2000	2.1
90DC100GV24R16	24	100	1600	6.21	6.22	2000	2.1
90DC100GV90R16	90	100	1600	6.21	1.66	2000	2.1
90DC100GV180R16	180	100	1600	6.21	0.83	2000	2.1
90DC200GV12R16	12	200	1600	12.42	24.88	2000	2.3
90DC200GV24R16	24	200	1600	12.42	12.44	2000	2.3
90DC200GV90R16	90	200	1600	12.42	3.32	2000	2.3
90DC200GV180R16	180	200	1600	12.42	1.66	2000	2.3

REDUCTION RATIO PERFORMANCE CHART

■ 40W/70W

SPEED r/min	REDUCTION RATIO	3	3.6	5	6	7.5	10	12.5	15	18	20	25	30
1600	Output bearing speed r/min	533	444	320	267	213	160	128	107	89	80	64	53
	Rated torque N·m	0.52	0.62	0.86	0.86	1.29	1.72	1.93	2.32	2.78	3.09	3.87	4.64
SPEED r/min	REDUCTION RATIO	36	40	50	60	75	90	100	120	150	180	200	
1600	Output bearing speed r/min	44	40	32	27	21	18	16	13	11	9	8	
	Rated torque N·m	5.57	6.19	6.96	8.35	10.44	12.53	13.92	16.7	20	20	20	

■ 65W/120W

SPEED r/min	REDUCTION RATIO	3	3.6	5	6	7.5	10	12.5	15	18	20	25	30
1600	Output bearing speed r/min	533	444	320	267	213	160	128	107	89	80	64	53
	Rated torque N·m	0.838	1.0	1.397	1.677	2.096	2.975	3.144	3.773	4.527	5.03	6.288	7.545
SPEED r/min	REDUCTION RATIO	36	40	50	60	75	90	100	120	150	180	200	
1600	Output bearing speed r/min	44	40	32	27	21	18	16	13	11	9	8	
	Rated torque N·m	9.054	10.06	11.32	13.58	16.977	20	20	20	20	20	20	

■ 100W/200W

SPEED r/min	REDUCTION RATIO	3	3.6	5	6	7.5	10	12.5	15	18	20	25	30
1600	Output bearing speed r/min	533	444	320	267	213	160	128	107	89	80	64	53
	Rated torque N·m	1.29	1.55	2.15	2.58	3.22	4.3	4.83	5.8	6.96	7.74	9.67	11.6
SPEED r/min	REDUCTION RATIO	36	40	50	60	75	90	100	120	150	180	200	
1600	Output bearing speed r/min	44	40	32	27	21	18	16	13	11	9	8	
	Rated torque N·m	13.92	15.47	17.41	20	20	20	20	20	20	20	20	

STANDARD GEARBOX
90GF □H

EARED GEARBOX
90GF □HE

RIGHT ANGLE HOLLOW GEARBOX
L90GF □RC

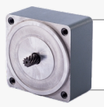

INTERMEDIATE GEARBOX
90GM10

RIGHT ANGLE SOLID GEARBOX
L90GF □RT

□ indicates the reduction ratio (1:3~200); middle gearbox: (1 : 10)

DIMENSIONS (CAD)

90DC(40W/70W)

Round-axis motor

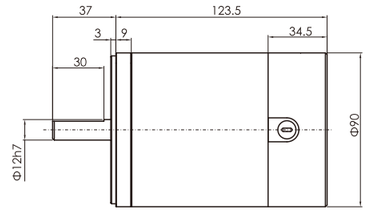

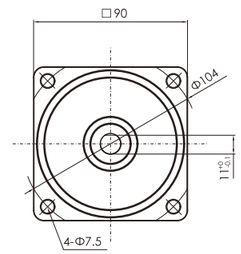

90DC(40W/70W)

Combination:motor + standard gearbox (reduction ratio: 1:3~200)

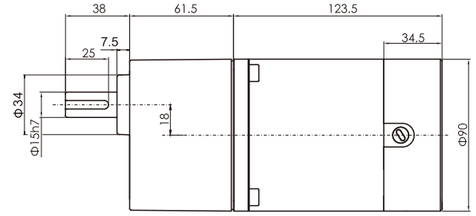

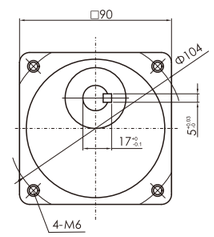

90DC(40W/70W)

Combination:motor +intermediate gearbox+standard gearbox(reduction ratio:1:200~1800)

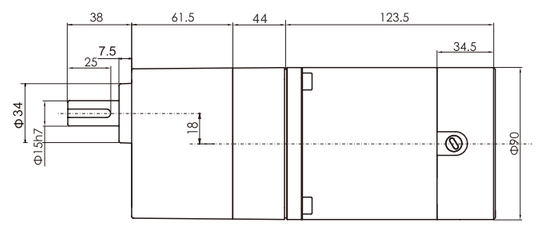

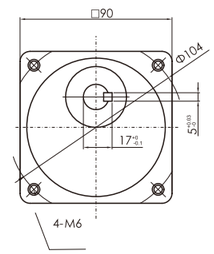

DIMENSIONS (CAD)

90DC(40W/70W)

Combination: motor + eared gear (reduction ratio: 1:3~200)

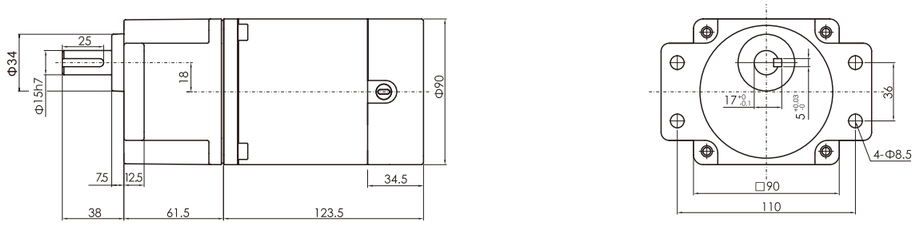

90DC(40W/70W)

Combination:motor+intermediate gearbox+eared gear(reduction ratio:1:200~1800)

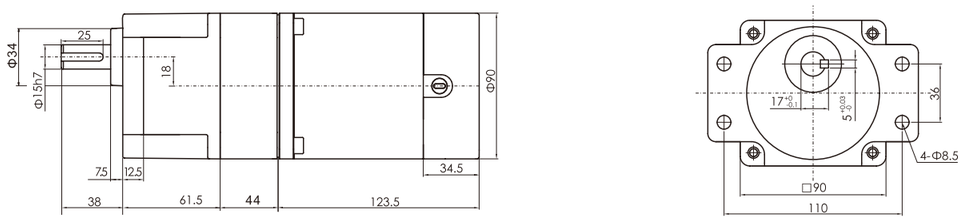

90DC(40W/70W)

Combination: motor + right angle solid gearbox
Reduction ratio: 1:3~200

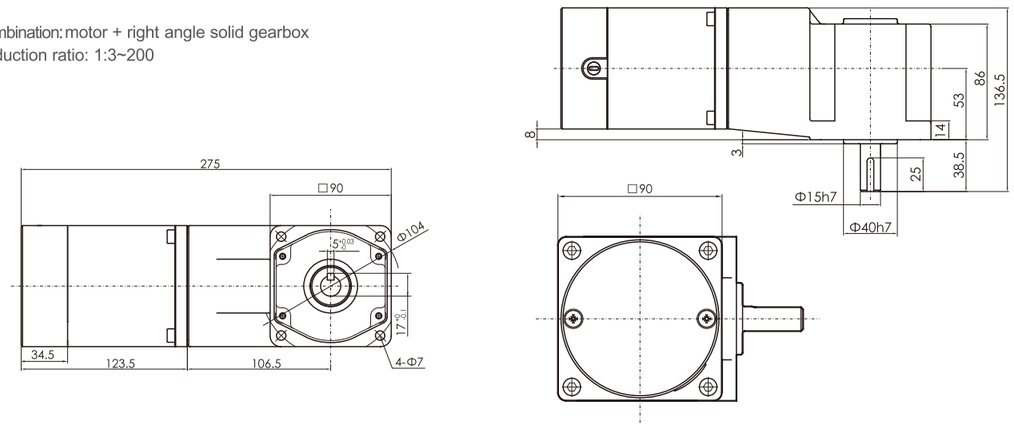

DIMENSIONS (CAD)

90DC(40W/70W)

Combination:motor+intermediate gearbox+right angle solid gearbox
Reduction ratio:(1:200~1800)

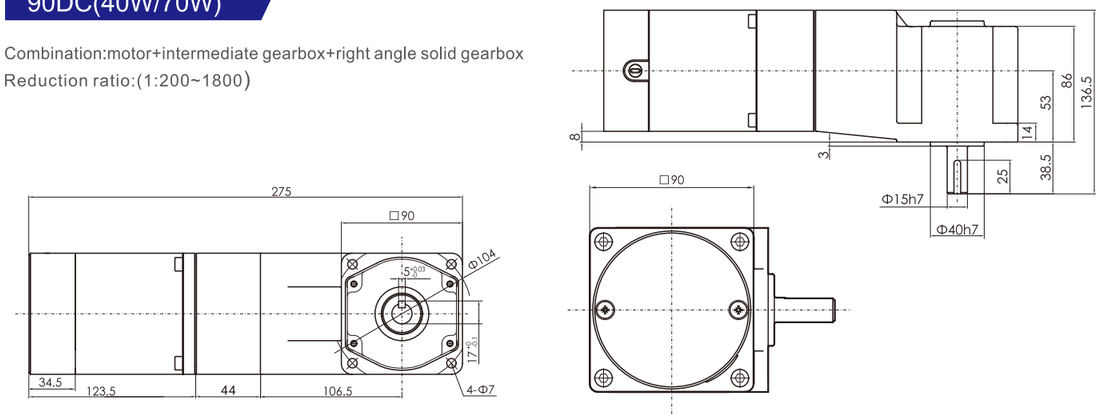

90DC(40W/70W)

Combination:motor+right angle hollow gearbox
Reduction ratio:(1:3~200)

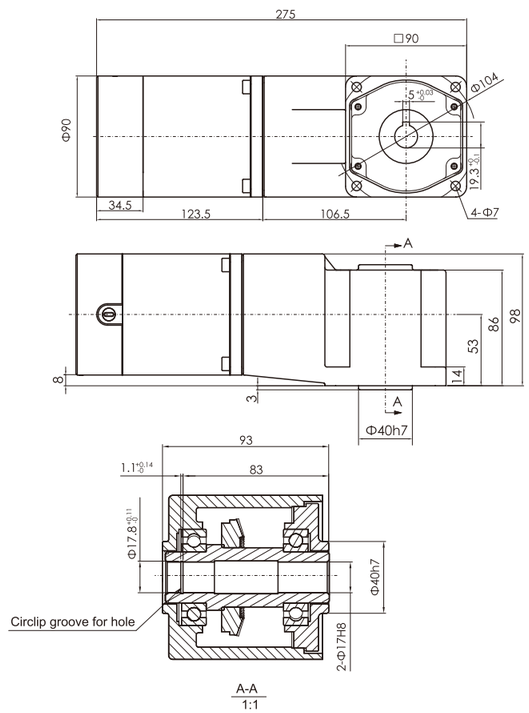

90DC(40W/70W)

Combination:motor+intermediate gearbox+right angle hollow gearbox
Reduction ratio:(1:200~1800)

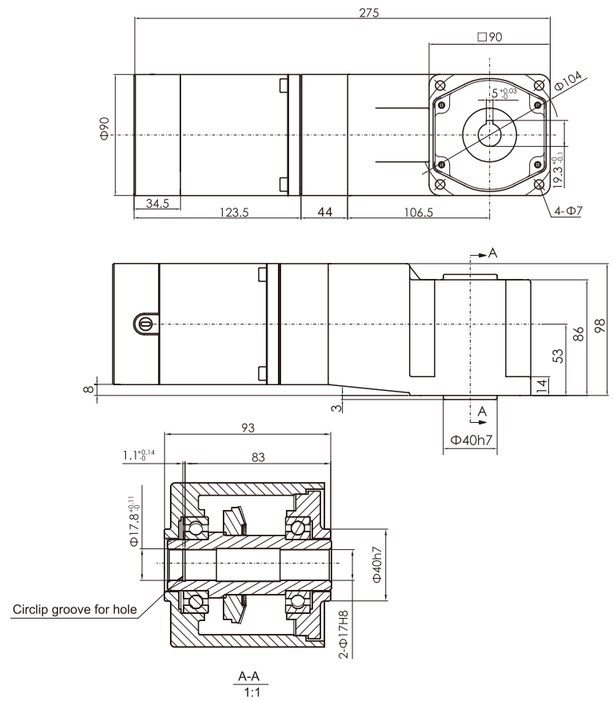

DIMENSIONS (CAD)

90DC(65W/120W)

Round-axis motor

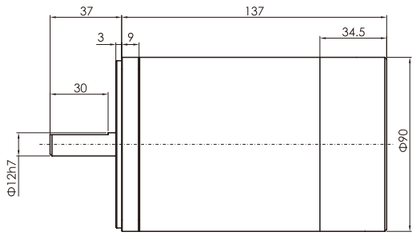

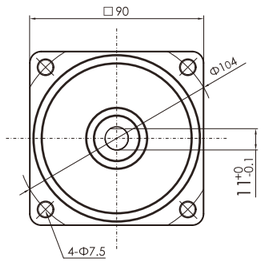

Combination: motor + standard gearbox (reduction ratio: 1:3~200)

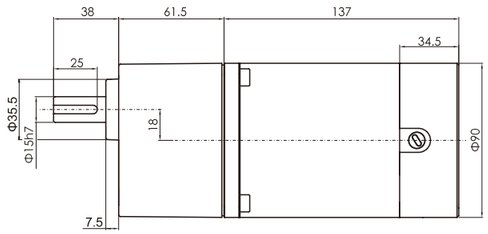

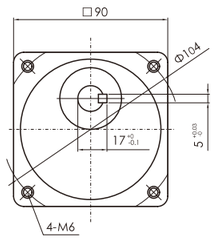

Combination:motor+intermediate gearbox+standard gearbox(reduction ratio:1:200~1800)

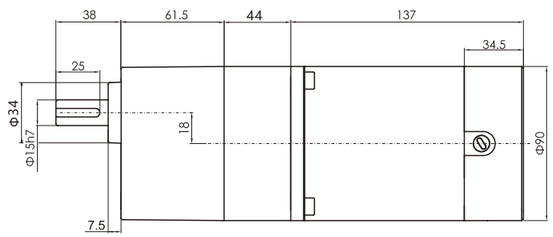

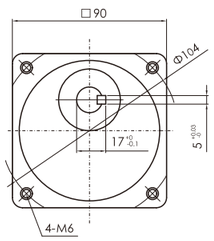

DIMENSIONS (CAD)

90DC(65W/120W)

Combination: motor + eared gear (reduction ratio: 1:3~200)

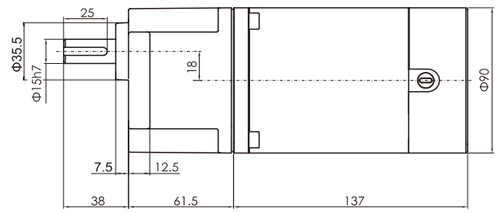

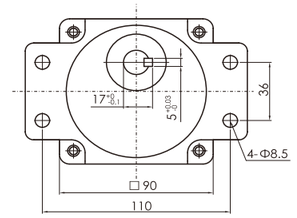

Combination:motor+intermediate gearbox+eared gear(reduction ratio:1:200~1800)

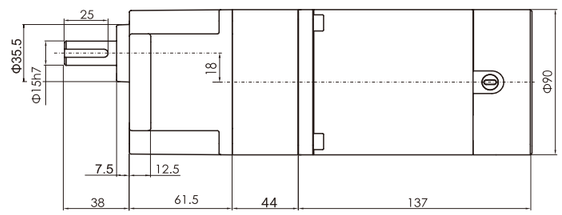

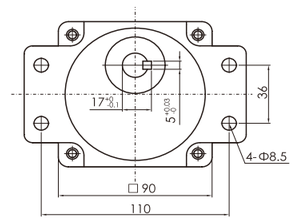

90DC(65W/120W)

Combination: motor + right angle solid gearbox
Reduction ratio: 1:3~200

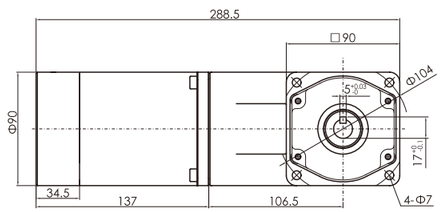

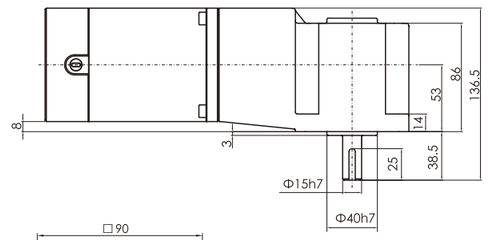

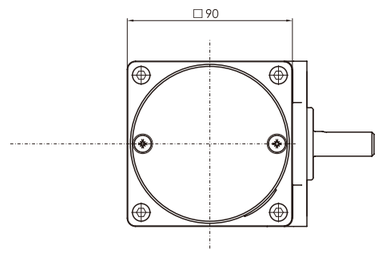

DIMENSIONS (CAD)

90DC(65W/120W)

Combination:motor+intermediate gearbox+right angle solid gearbox
Reduction ratio:1:200~1800

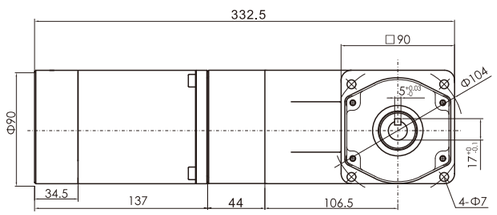

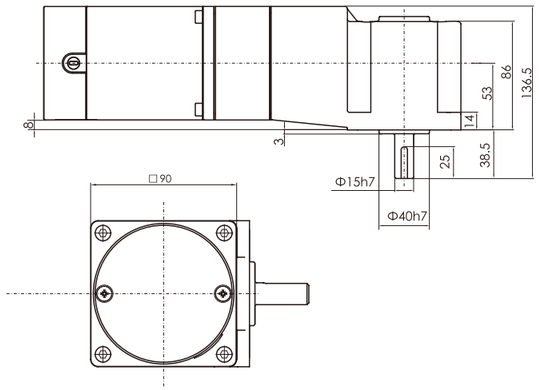

90DC(65W/120W)

Combination: motor + right angle hollow gearbox
Reduction ratio: 1:3~200

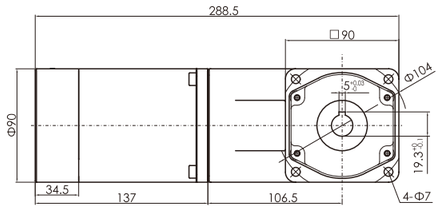

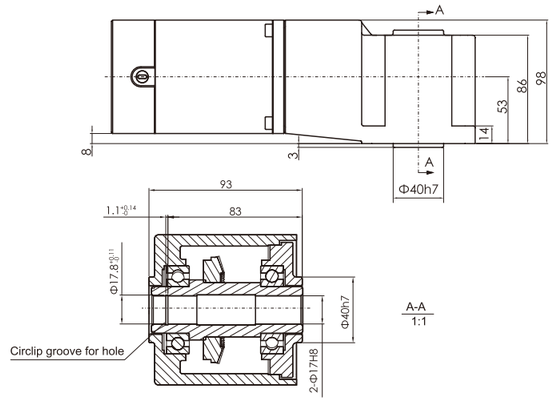

90DC(65W/120W)

Combination:motor+intermediate gearbox+right angle hollow gearbox
Reduction ratio:1:200~1800

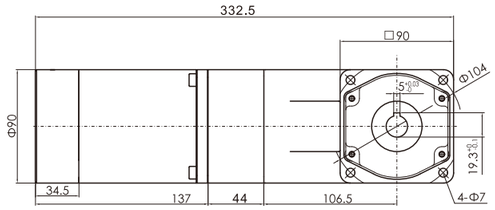

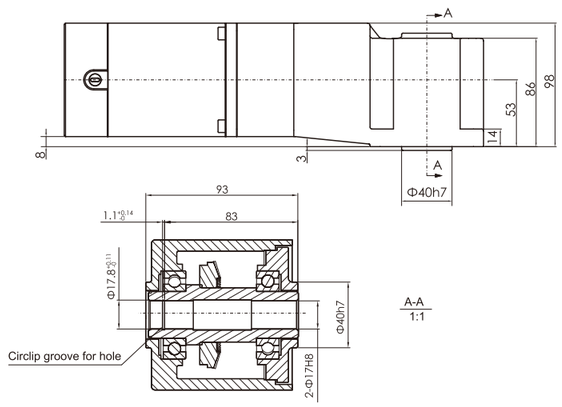

DIMENSIONS (CAD)

90DC(100W/200W)

Round-axis motor

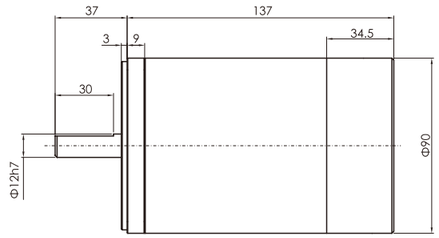

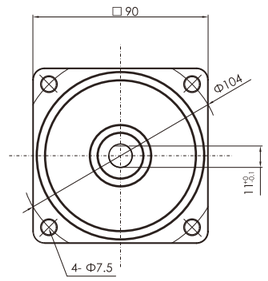

Combination: motor + standard gearbox (reduction ratio: 1:3~200)

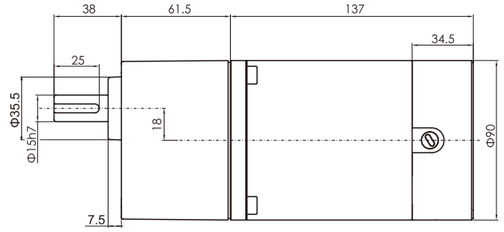

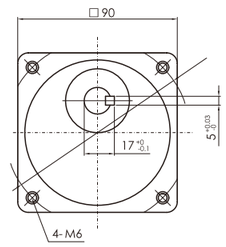

Combination: motor + eared gear (reduction ratio: 1:3~200)

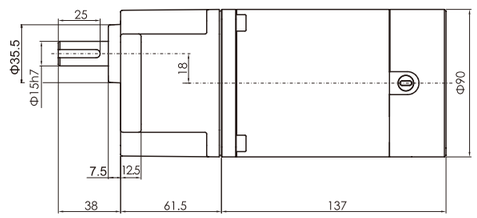

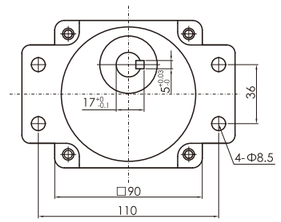

DIMENSIONS (CAD)

90DC(100W/200W)

Combination: motor + right angle solid gearbox
Reduction ratio: 1:3~200

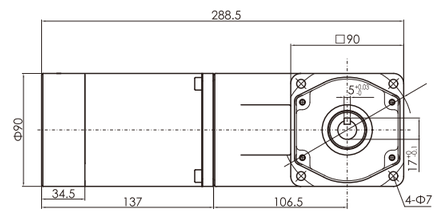

Combination: motor + right angle hollow gearbox
Reduction ratio: 1:3~200

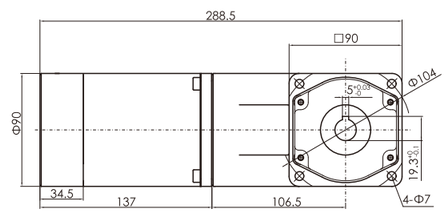

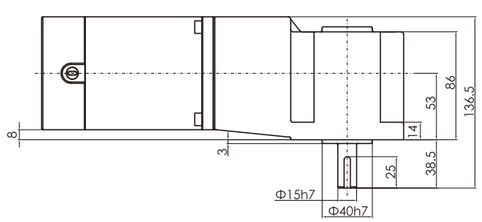

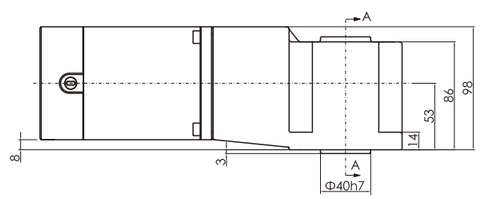

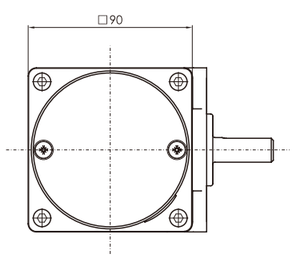

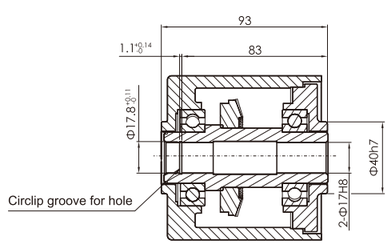

A-A
1:1

100DC

200W/300W

MOTOR PERFORMANCE

MODEL	VOLT. V	POWER W	LOAD PARAMETERS SPEED r/min	TORQUE kg·cm	CURRENT A≤	BRUSH LIFE h	MOTOR WEIGHT kg
100DC200GV24R18	24	200	1800	11.04	12.44	2000	2.4
100DC200GV90R18	90	200	1800	11.04	3.32	2000	2.4
100DC200GV180R18	180	200	1800	11.04	1.66	2000	2.4
100DC300GV24R18	24	300	1800	16.56	18.66	2000	2.5
100DC300GV90R18	90	300	1800	16.56	4.98	2000	2.5
100DC300GV180R18	180	300	1800	16.56	2.49	2000	2.5

REDUCTION RATIO PERFORMANCE CHART

SPEED r/min	REDUCTION RATIO	3	3.6	5	6	7.5	10	12.5	15	18	20	25	30
1800	Output bearing speed r/min	600	500	360	300	240	180	144	120	100	90	72	60
	Rated torque N·m	2.578	3.094	4.297	5.156	6.446	8.594	10.74	11.6	13.92	15.47	19.34	23.21
SPEED r/min	REDUCTION RATIO	36	40	50	60	75	90	100	120	150	180	200	
1800	Output bearing speed r/min	50	45	36	30	24	20	18	15	12	10	9	
	Rated torque N·m	27.85	30.94	38.68	41.77	44	44	44	44	44	44	44	

STANDARD GEARBOX
100GF □H

RIGHT ANGLE HOLLOW GEARBOX
L100GF □RC

RIGHT ANGLE SOLID GEARBOX
L100GF □RT

□ indicates the reduction ratio (1:3~200)

DIMENSIONS (CAD)

100DC(200W/300W)

Round-axis motor

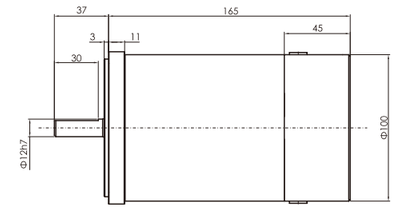

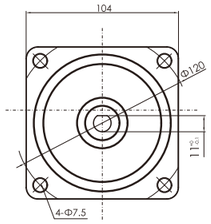

100DC(200W/300W)

Combination: motor + standard gearbox (reduction ratio: 1:3~200)

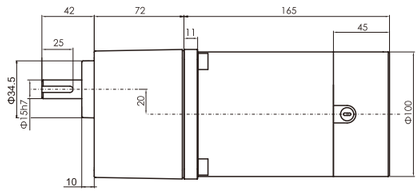

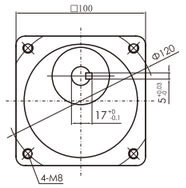

DIMENSIONS (CAD)

100DC(200W/300W)

Combination: motor + right angle solid gearbox
Reduction ratio: 1:3~200

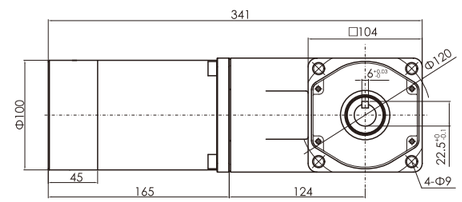

Combination: motor + right angle hollow gearbox
Reduction ratio: 1:3~200

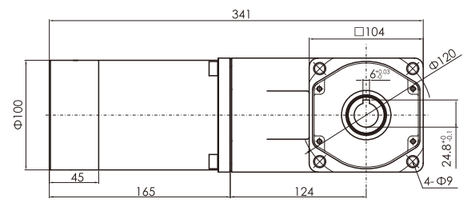

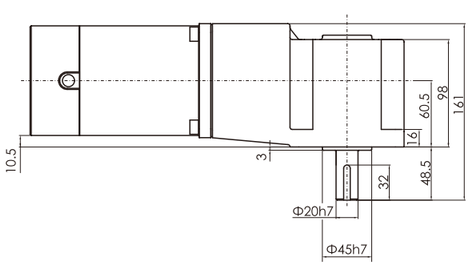

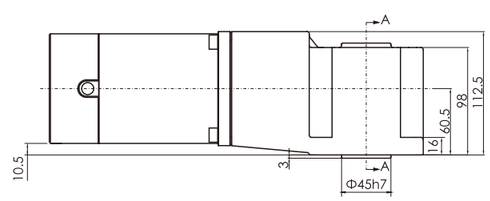

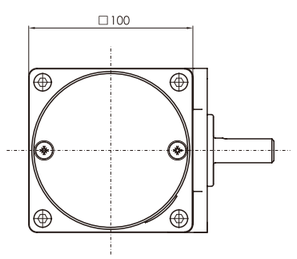

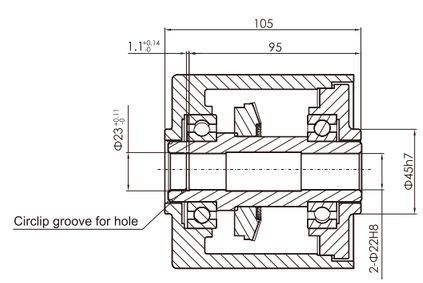

A-A
1:1

TERMINAL BOX DIRECTION

1、The Wanshsin standard product has no junction box, if you want to order the gear reducer motor with junction box, a special interpretation and a diagram for junction box direction shall be attached.

2、Wanshsin can adjust the junction box in four directions of upward, downward, leftward and rightward according to customer's requirement. If the customer has no special requirement,the direction of the junction box shall be installed upward .The specifications are as follows:

The direction of the junction box of the normal gear reducer

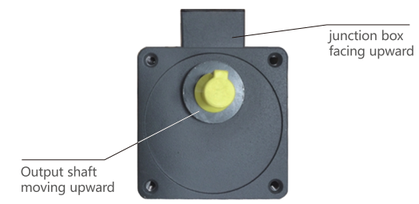

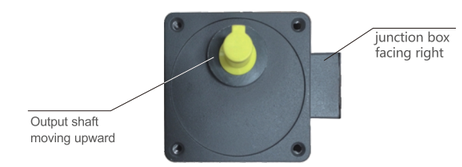

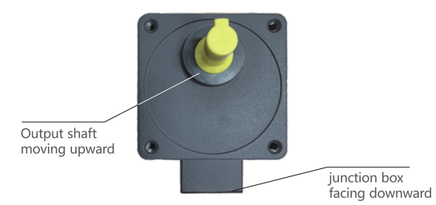

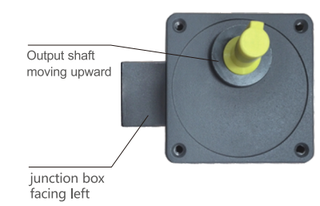

Direction of the rectangle gear reducer junction box

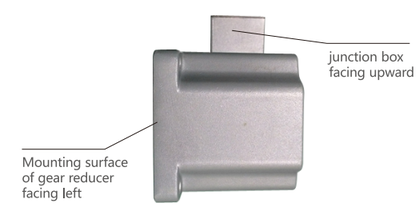

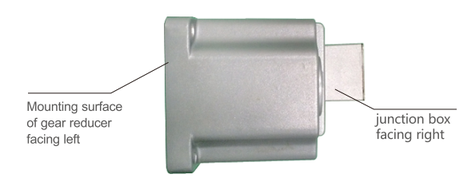

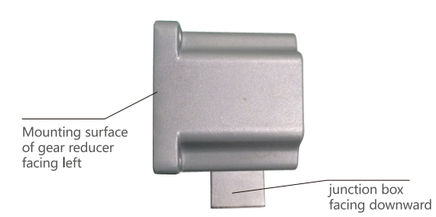

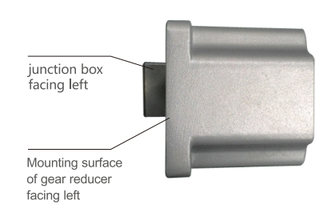

TECHNICAL APPLICATION
(DESCRIPTION AND INSTALLATION)

MOTOR

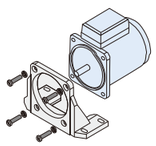

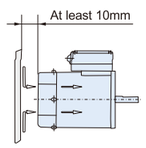

1 Features

As a relatively independent part of this product series, the motor has six varieties and ten series for your option: by varieties: standard, damping, variable speed, electromagnetic brake, variable speed electromagnetic brake and DC motors; by power: 6W, 15W, 25W, 40W, 60W, 90W, 120W, 140W, 200W, and 250W; by operating voltage: single phase 110V/220V, and three phase 220V/380V. The motor can match the terminal box of independence for easy electrical connection. Since the product line is precision small power machine and has sophisticated appearance and accurate size, it is strictly prohibited to impact excessively in the assembly to avoid causing damage to the internal structure; in the selection process,also pay attention to the axial and radial load of the output bearing. To ensure the life, please select carefully and use reasonably.

2 Installation

For an independent motor with circular output bearing, the tolerance of connecting hole size for bearing component installation are 6H7, 8H7, 10H7 and 12H7 respectively depending on the models. Except for the reason of design structure, it is recommended to use flexible coupler of corresponding specifications for assembly. If it is difficult to install the end face, it is recommended to use right-angle mounting feet of corresponding specifications. In addition, do not to clog the suction opening in the rear side for the motors with cooling fans. It is recommended to leave a space not less than 10mm.

Combination of standard gearbox and motor

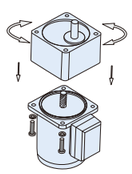

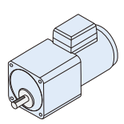

With intermediate gearbox

1 Features

The motor positions accurately through end face retaining ring and standard gearbox, and can provide standard reduction ratio of 1/3~1/200; when this series of reduction ratio change, you can select motors of different functions to achieve practical combinations with richer changes. For example: variable speed, electromagnetic brake,and so on.

2 Installation

Standard gearbox and motor are precision machinery. During installation after design and selection, it is one of the factors that determine the life.

3 Connection of the motor and standard gearbox

For the assembly of precision machinery, the motor used together with the gearbox has flange spigot in its connecting end. The connecting end of gearbox has a mating spigot. The user can adjust the assembly position of the gearbox and motor according to the actual situation, that is, the motor and gearbox can be rotated freely as shown. Adjust to the desired position, and then secure the four screws on the motor flange. Note the order of the fastening screws,tighten diagonall in turn and then fit the motor and gearbox closely.

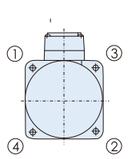

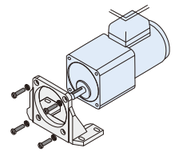

Combination with right-angle mounting feet

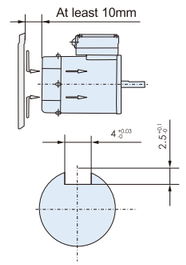

Reserved space for installation

4 Connection with the equipment

The connecting surface of gearbox output bearing is flat, and the connecting holes on the surface are threaded. The surface is fine finished and can be directly connected to the processed connecting surface of the equipment. Note that it also should be tightened diagonally in turn. If limited by equipment connection or design structure difference, it is recommended to install with specially configured right angle mounting feet, which is more reliable and easy to connect, easy to regulate speed, and high precision flexible couplers are available.

Similarly, do not to clog the suction opening in the rear side for the motors with cooling fans. It is recommended to leave a space not less than 10mm.

The motor, gearbox and intermediate gearbox of this product series are close transmission components, and it is prohibited to impact or twist violently when connecting to the load. To faciitate assembly, these problems have beenconsidered in product design. The keyway width is 4mm,and the outer diameter tolerance of the bearing is h7.

Combination of right-angle gearbox and motor

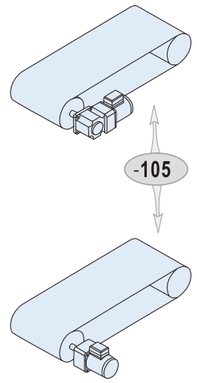

Comparison of installation space

1 Features

Different from traditional standard gearboxes (or parallel shaft gearboxes), in order to give designers greater choice and make the equipment more compact, we also offer right angle gearboxes. In addition to all the features of standard gearboxes, i.e. wide range of speed ratio selectivity (i=3~600)and excellent transfer properties, the right-angle gearboxes also have high strength casing and compact installation, which the standard gearboxes do not have.

Similarly, under the aforementioned conditions, you can achieve different combinations of features by selecting motors of different functions.

For example : variable speed , electromagnetic brake, reversible , and so on.

2 Installation

Right angle gearbox, intermediate gearbox and motor are precision machinery. The assembly quality after design and selection will directly affect the service life and performance.

3 Connection of the motor and the right angle gearbox

For the assembly of precision machinery, in addition to independent connection terminal box, the motor used together with the right angle gearbox has flange spigot in its connecting end. The connecting end of the right angle gearbox has a mating spigot. The user can rotate the relative rotation of the motor and the right angle gearbox appropriately according to the actual situation. Adjust to the desired position, and then secure the four screws on the motor flange.

Note the order of screw tightening: tighten diagonally in turn.

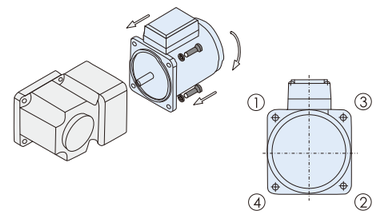

4 Connection with the equipment

The end surface of right angle gearbox output bearing is finished plane. The four through holes distributed in the four corners can fit the processed connection surface of the equipment directly. The output of right angle gearbox includes solid axis and hollow axis forms. The user can select according to the load form. The bolts also should be fastened diagonally in turn.

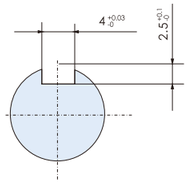

5 Connection with solid axis output of right angle gearbox

The solid axis output of right angle gearbox is in keyway structure. Corresponding to different specifications, the sizes of the output bearing mounting holes are 12H7, 15H7 and 20H7 respectively. In connection with the load, do not knock or twist violently. Under the premise of ensuring the assembly quality, other assembly factors are also considered in product design and production. The figure shows 4mm key width dimensional tolerance.

7 Precautions for motor and gearbox assembly

Motor, gearbox and intermediate gearbox are precision machinery. In practice, damage and scrapping are often caused by improper assembly, so that the assembly is also one of the factors affecting the normal use.

- Shaft and key tolerance

To facilitate the assembly and ensure reliable connection and torque transmission, the related keyway tolerances are generally slightly larger than generic devices (see sample for specific tolerance), the tolerance of output bearings is H7,and the tolerance of holes is H8.

- Percussion problem

It is prohibited to transfer the pressure of load axis and sleeve in the assembly process, or else it will easily lead to damage to the bearings or gears in the motor or gearbox and ratcheting prints on the gear teeth. Also avoid violent knock and twist. Control the dimensional tolerance of the load axis and sleeve strictly; if necessary, pad soft liner material and knock softly.

- Concentricity problem

Since the output is in rotating form, concentricity is particularly important in variable speed and heavy-duty condition. It is recommended to use the flexible couplers of our company, which not only have small rotary inertia and compact structure, but also compensate concentricity and transmit torque.

6 Connection with hollow axis output of right angle gearbox

In the assembly of hollow series right angle gearboxes, it is also prohibited to knock or twist violently. The dimensional tolerance of the axis connected to the hollow axis is h8, including 15h8, 17h8 and 22h8. To ensure reasonable and reliable axial positioning in load connection, the hollow series right angle gearboxes also integrate axially fixed structure. The recommended installation is shown in the figure:

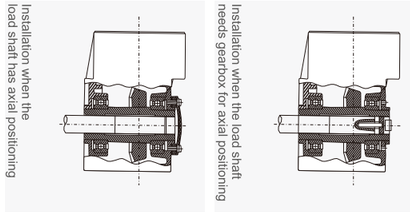

- Special Note

1、For axial positioning with the right angle hollow gearbox, over-positioning isn't allowed for the load axis, or else it will easily damage the gearbox.
2、Technical requirements on axis length of rightangle hollow gearbox:
   - If this axis is fully supported and fixed by hollow axis, the axial length should be equal to or slightly shorter than the hollow axis.
   - If there is no supporting effect and only the torque is transferred, the axis only needs to be inserted 1/3 depth of the hollow axis.

- Steps of axial fixation

1、Remove the dust cover on the other side of the hollow axis of the right angle gearbox;
2、As shown in the figure, fix the load axis of different structures in the method shown:
3、Install the rear dust cover (Note: Bolt height shall not exceed 2mm of the rear cap);
4、If the dust cover can't be installed, you must block the screw holes of the dust cover with M4×5 screws, or else it will leak oil; the screws shouldn't be too long, or else it will damage the internal bearings.